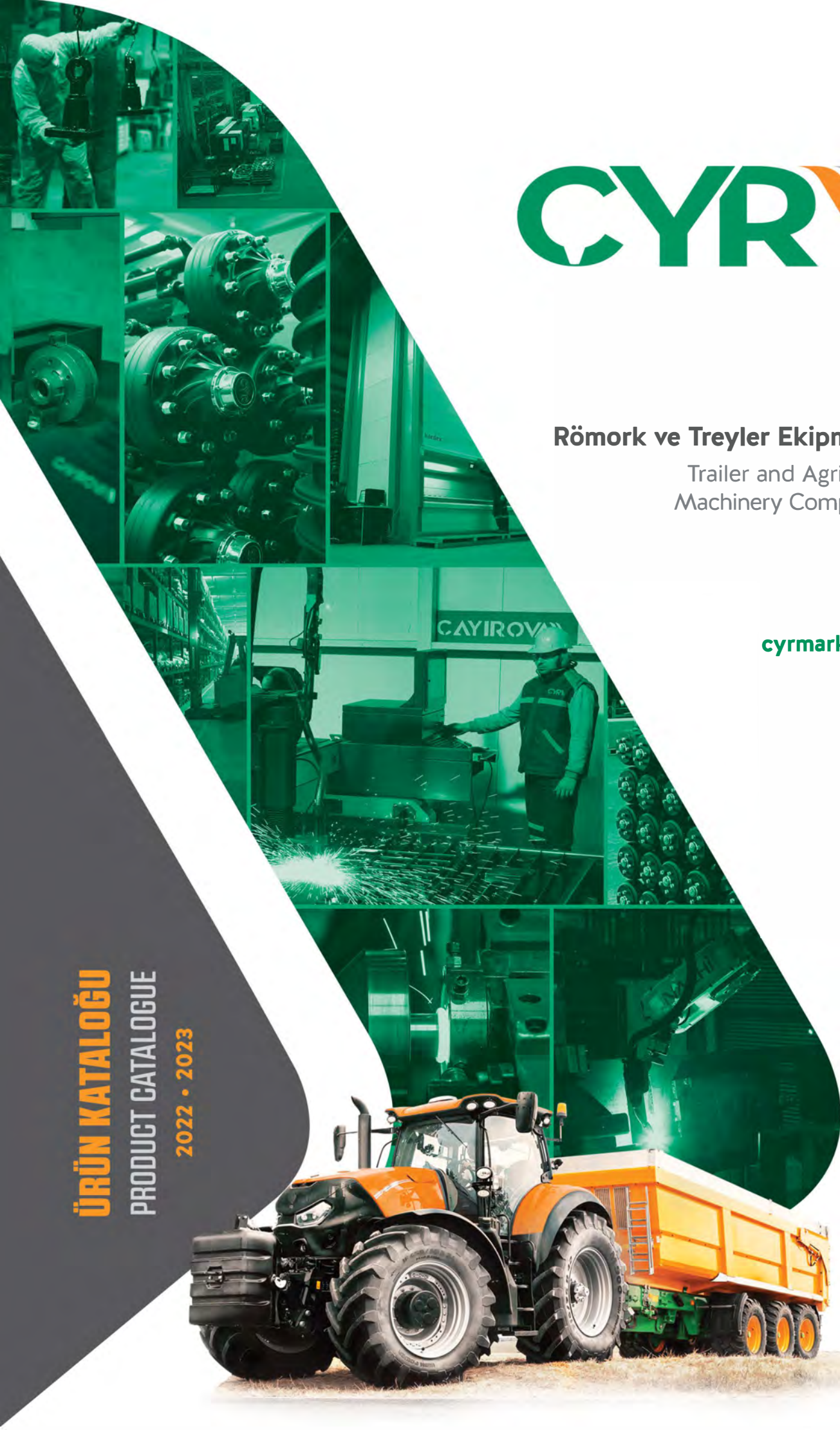

CYR

Römork ve Treyler Ekipmanları

Trailer and Agricultural Machinery Components

cyrmarket.com

ÜRÜN KATALOĞU

PRODUCT CATALOGUE

2022 • 2023

60000 m² ÜZERİNE KURULU ÜRETİM TESİSİ

Manufacturing Facility Built on 60000 m² Land

Biz,

Biz, 1974 yılından bugüne edindiğimiz tecrübeyi, günümüzün teknolojisini de kullanarak aranan marka konumunu daha da güçlendirerek, sektöründe "takip eden değil", "takip edilen" bir firma olarak gelişimimizi sürdürmekteyiz. Aynı düşünceden hareketle, değişimi, yenilenmeyi ve gelişimi bir kurum kültürü haline getirerek, firma içinde ve dışında ilişkide olduğumuz her noktada tecrübeli ekibimiz ile bu vizyonun uygulayıcısı ve koruyucusu olmaya çalışmaktayız.

50. yılımıza yaklaştığımız bu süreçte, üretimini ve gelişimini devam ettiren firmamız, 60.000 metrekarelik bir alanı kaplayan üretim tesislerinde 21. Yüzyıl'ın dünyada yaptığı etkiler doğrultusunda ekonomik konjonktürün ve bilgi teknolojilerinin sürekli farklılaşmasına rağmen bizler, oluşturduğumuz sağlam politikalar sayesinde esnek, atak ve rekabetçi yapımızı her geçen gün daha da dayanıklı hale getirmekteyiz.

Bu bağlamda; yapılacak teknoloji yatırımlarından müşteri taleplerine, pazarlama hedeflerinden ülke inceleme çalışmalarına, Ar-Ge yatırımlarından sevkiyata kadar bütün süreçler uyum içerisinde ilerlemektedir.

Müşteri ilişkileri sürekli ürün geliştirme için kilit bir departmandır. Gelişmiş bilgi ağı sayesinde sahadan edindiğimiz bilgiler, her şeyden önce profesyonellerin verimliliği, kullanıcıların deneyimleri sayesinde araştırma ve teknik bilgi zenginliğini artırmak için toplanır ve işlenir. CYR şirketinin gelişmesi için en değerli varlıkları memnun müşterileridir.

Sektörün zorluklarını ve müşterilerimizin ihtiyaçlarını biliyoruz: Sürdürülebilirlik ancak sıkı çalışma ve yenilikçi çözümlerle elde edilir. Bu nedenle şirket olarak mükemmel ürünlerin geliştirilmesine odaklanıyoruz.

About Us,

We continue our development as a company that is "followed" rather than "followed" in its sector by further strengthening its position as a sought-after brand by using the experience we have gained since 1974 and today's technology. Based on the same idea, we are trying to be the implementer and protector of this vision with our experienced team at every point we are in contact with, inside and outside the company, by making change, renewal and development a corporate culture.

Continuing its production and development in this process as we approach our 50th anniversary, our company, which continues its production and development in its production facilities covering an area of 60,000 square meters, despite the continuous differentiation of the economic conjuncture and information technologies in line with the effects of the 21st century on the world, we have maintained our flexible, agile and competitive structure thanks to the solid policies we have created. We are making it more durable every day.

In this context; All processes from technology investments to customer demands, from marketing targets to country investigation studies, from R&D investments to shipment are proceeding in harmony.

Customer relations is a key department for continuous product development. Thanks to the advanced information network, the information we gain from the field is collected and processed to increase the wealth of research and technical knowledge, first of all, thanks to the efficiency of the professionals and the experiences of the users. The most valuable assets for the development of CYR company are its satisfied customers.

We know the industry's challenges and our customers' needs: Sustainability is only achieved through hard work and innovative solutions. That's why we as a company focus on the development of excellent products.

CAYIROVA

SERTİFİKALAR
CERTIFICATES

Tasarım, Üretim ve Planlama

Design, Production and Planning

Çayırova Otomotiv Konya 3. OSB'de üretim faaliyetlerini sürdürmekte, teknolojik gelişmeler doğrultusunda yatırımlarında hız kesmeyerek kalite çıtasını daha üst seviyelere taşımaktadır. Aynı zamanda kontrol edilebilir kalite standartlarımızın bir gereği olarak dövme, kumlama, galvanizhane, boyahane, preshane, torna, lazer, plazma, robotik kaynak gibi üretim sürecimizdeki önemli birimler de firma bünyesinde yer almaktadır.

Çayırova Automotive continues its production activities in Konya 3rd OSB and raises the quality bar to higher levels by not slowing down its investments in line with technological developments. At the same time, as a requirement of our controllable quality standards, important units in our production process such as forging, sandblasting, galvanizing, paint, press, lathe, laser, plasma, robotic welding are also included in the company.

Kalite Yönetimi

Quality Management

Kalitenin devamlı olması gerektiği ve istikrarı zorunlu kıldığı doğrusuna her zaman sadık kalan CYR, gerekli olan tüm kalite belgelerine sahip olmanın yanında, ürettiği römork ve treyler ekipmanlarının test belgelerini de alarak, dünya ülkelerine ihracat yapma hedefini gerçekleştirmiştir.

CYR için kalite, şirketin tüm alanlarına yayılan ve tüm üretim sürecini kapsayan bir konudur. Planlama ve tedarikçi seçimi ile müşteri hizmetleri yönetimine kadar olan süreçte şirket standartlarını gözetmeye sürekli dikkat etmek ve bunları tüm şirkette iyileştirmek hedefimizdir. Hammadde ve malzemeler, en modern teknikler kullanılarak kontrollere tabi tutulur. Araştırma ve geliştirme ile doğrudan temas halinde çalışan laboratuvar personelimizin tecrübesi ürünün ve üretim sürecinin sürekli iyileştirilmesini amaçlamaktadır.

CYR, which has always been faithful to the truth that quality should be continuous and requires stability, has achieved its goal of exporting to the world countries by obtaining the test documents of the trailer and trailer components produces, as well as having all the necessary quality certificates.

For CYR, quality is an issue that spans all areas of the company and covers the entire production process. It is our goal to constantly pay attention to company standards in the process from planning and supplier selection to customer service management and to improve them throughout the company. Raw materials and materials are subject to controls using the most modern techniques. The experience of our laboratory staff, working in direct contact with research and development, aims at continuous improvement of the product and production process.conducted internally and are accordance to international accredited test facilities.

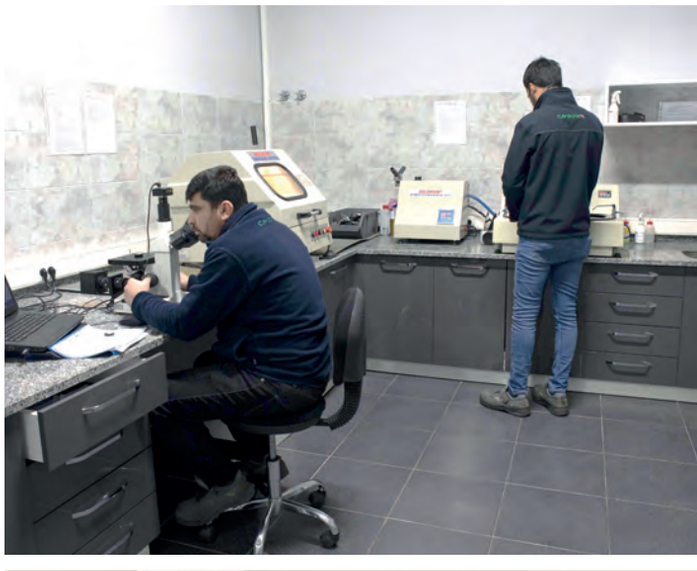

bizim için kalite

bir soru değil "cevaptır"

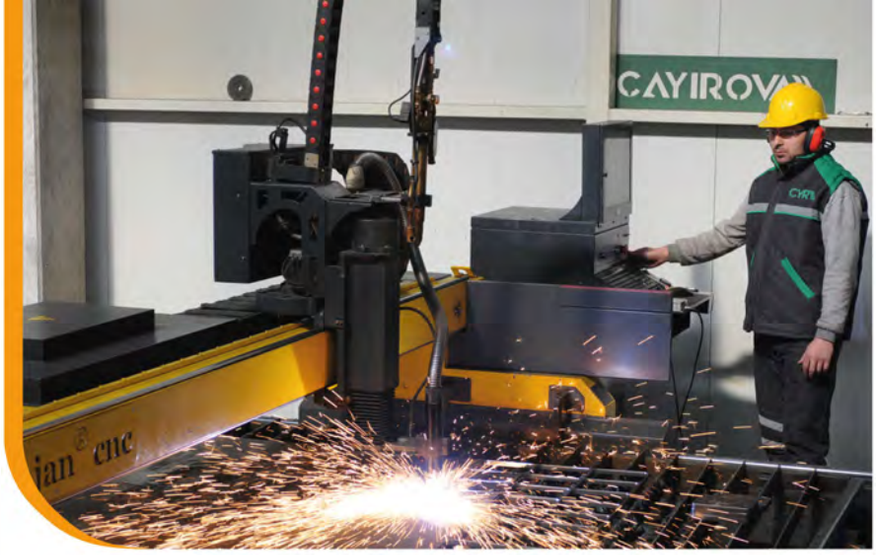
CAYIROVA
CNC

kardex

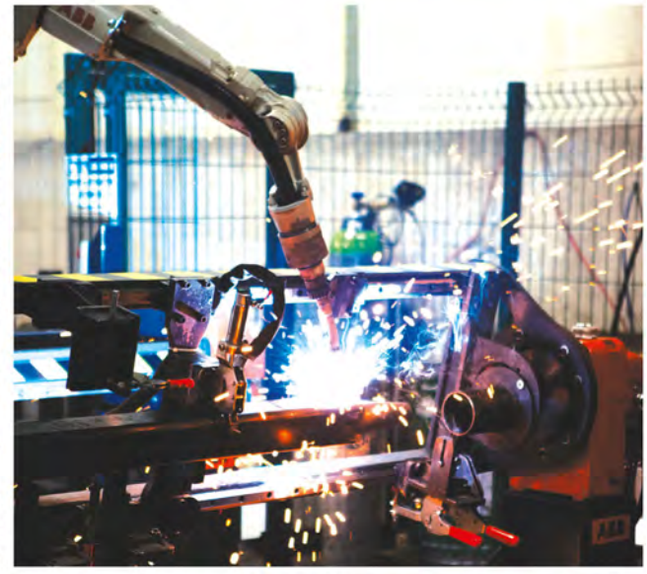

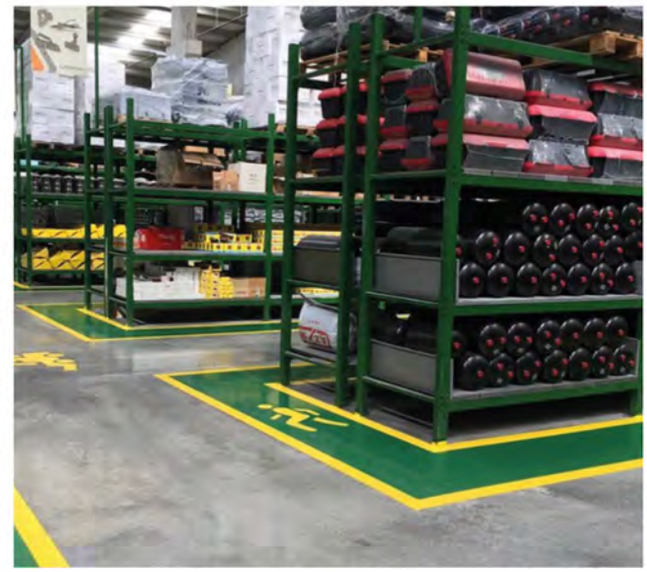

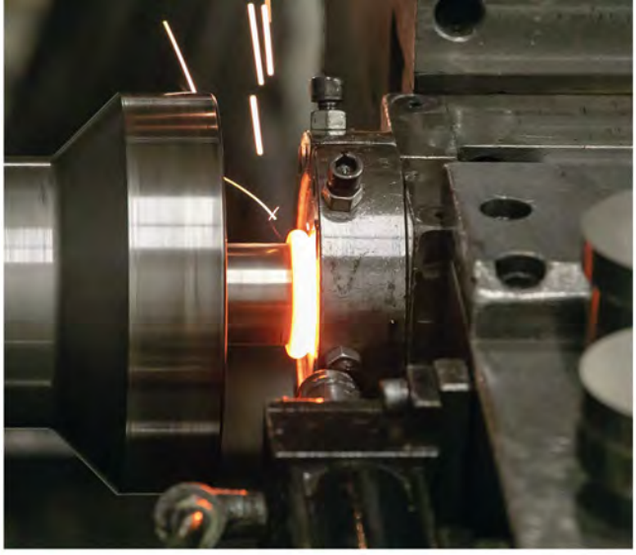

CAYROVA

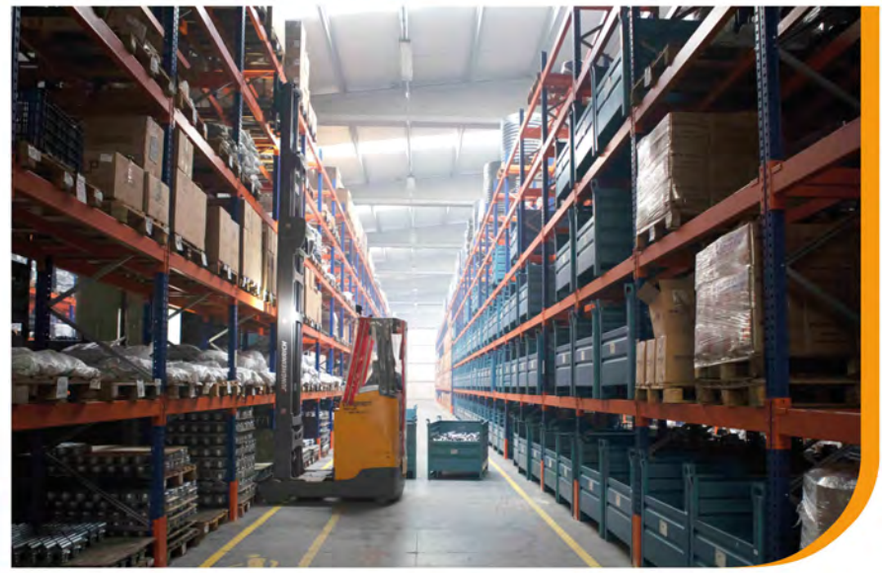

www.cyrmarket.com

Download on the App Store

GET IT ON Google Play

İÇERİK
CONTENTS

08-126

RÖMORK VE TARIM MAKİNE EKİPMANLARI

Trailer and Farm Machinery Components

127-140

HAFİF RÖMORK EKİPMANLARI

Utility Trailer Components

141-159

YEDEK PARÇA

Spare Parts

160-192

TREYLER EKİPMANLARI

Truck Trailer Components

RÖMORK ve TARIM MAKİNE EKİPMANLARI

TRAILER and FARM MACHINERY COMPONENTS

ÇAYIROVA
Römork ve Treyler Ekipmanları

Frenli ve Frensiz Dingiller Ara Hammadde Alternatifleri

Alternative Materials for Braked and Un-Braked Axle

Square **Kare**	Profile **Profil**	Tube **Boru**	Welded Square Profile **Kapama**
50 mm ⌀	70 mm □ - 6 mm	89 mm Ø	———
60 mm ⌀	80 mm □ - 8 mm	116 mm Ø	———
65 mm ⌀	90 mm □ - 8 mm	116 mm Ø	———
70 mm ⌀	90 mm □ - 8 mm	———	———
80 mm ⌀	100 mm □ - 10 mm	———	———
90 mm ⌀	100 mm □ - 10 mm 110 mm □ - 10 mm	127 mm Ø	———
100 mm ⌀	120 mm □ - 12 mm	———	120 mm □
120 mm ⌀	———	———	———

Frenli ve frensiz dingiller, montajlı kampana ve poryaların fiyatları belirtilen standart iz boyları için geçerlidir. Farklı iz boyu talepleri fiyatlarda değişiklik gerektirebilir.

Dingil kapasiteleri iz boyuna, bağlantı merkezine ve kullanılan lastik türüne göre değişiklik gösterebilir.

The capacity of the axles depend on track, spring centers and wheels used.

NOT:

› Siparişlerinizin sipariş kodları kullanılarak ve yazılı olarak verilmesini rica ederiz.

› Firmamız araçları ile yapılan sevkiyatlarda nakliye ücreti talep edilmemektedir.

› Kataloğumuzdaki bilgi, görsel ve çizimlerin kopyalanması kesinlikle yasaktır.

› Çayırova Otomotiv haber vermeksizin fiyat ve ölçü değiştirme hakkını saklı tutar.

› Ürün çizimlerindeki ölçülendirmelerde olabilecek hatalardan firmamız sorumlu değildir.

› Ürün renkleri temsilidir.

Şase Merkezine Göre Dingil Maksimum Taşıma Kapasitesi
Maximum Capacity With Different Pressure Points

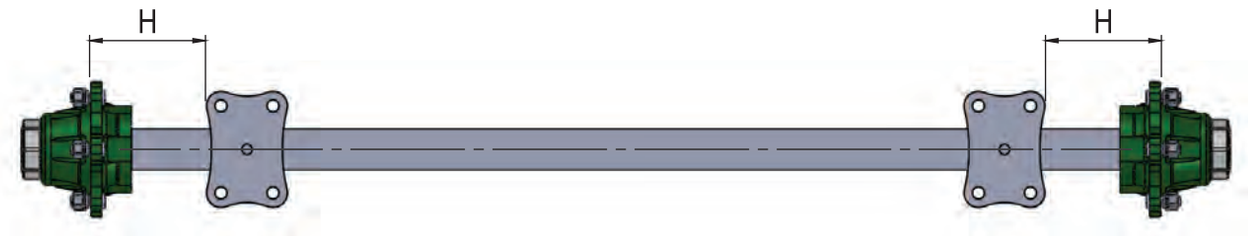

40-65
Tek Dingil / *Single Axle*

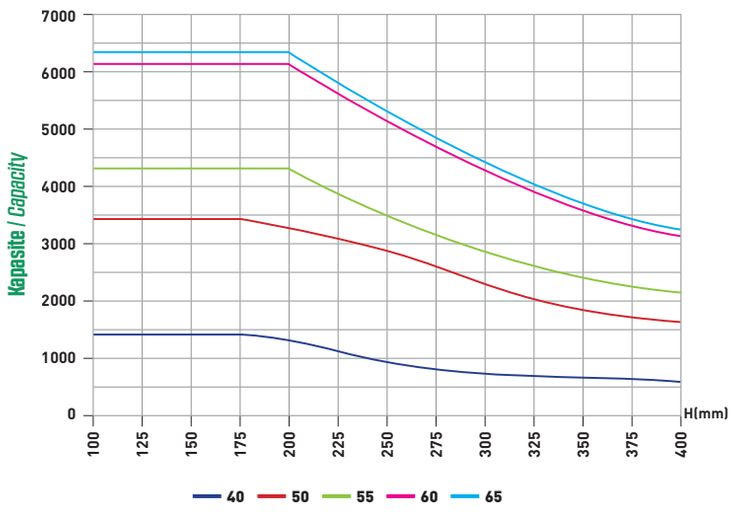

70-100
Tek Dingil / *Single Axle*

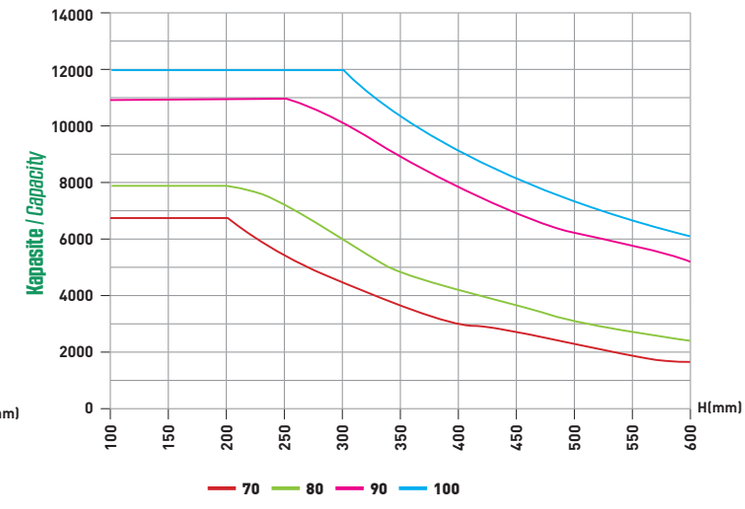

40-65
Çift Dingil / *Double Axle*

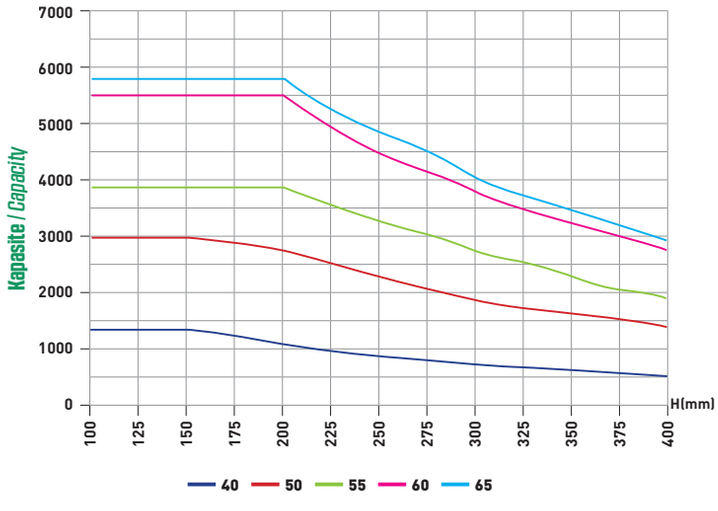

70-100
Çift Dingil / *Double Axle*

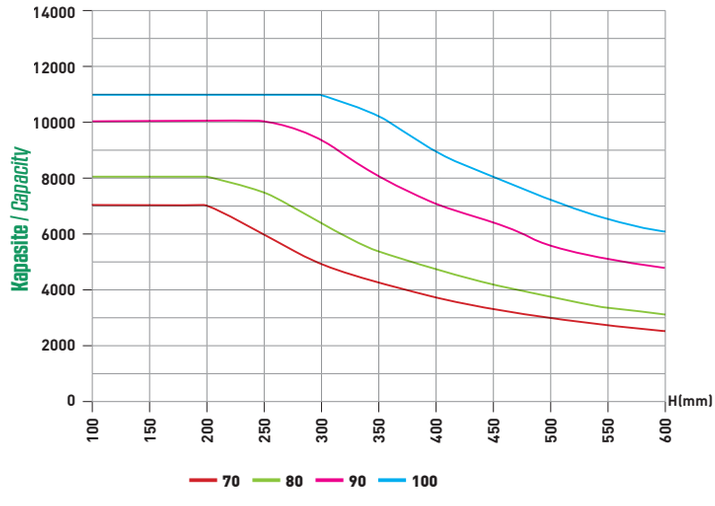

Şase Merkezine Göre Dingil Maksimum Taşıma Kapasitesi
Maximum Capacity With Different Pressure Points

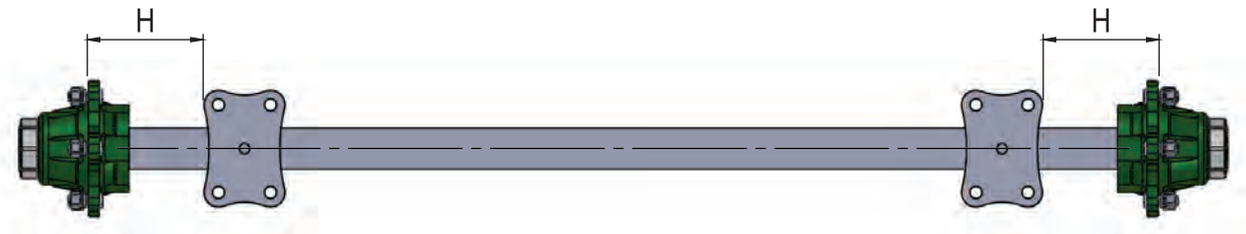

40-65
Tandem / *Tandem*

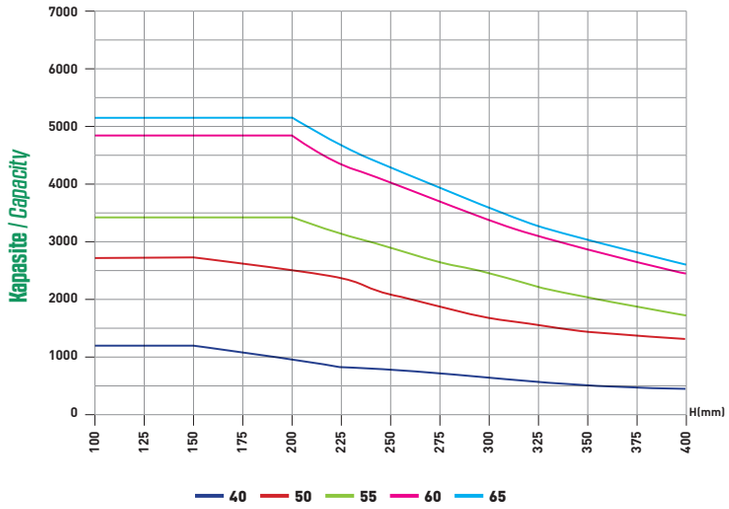

70-100
Tandem / *Tandem*

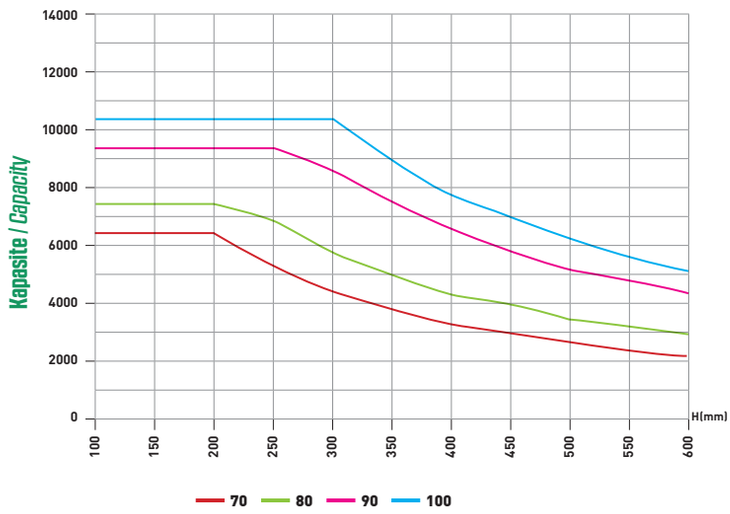

120-150
Tandem / *Tandem*

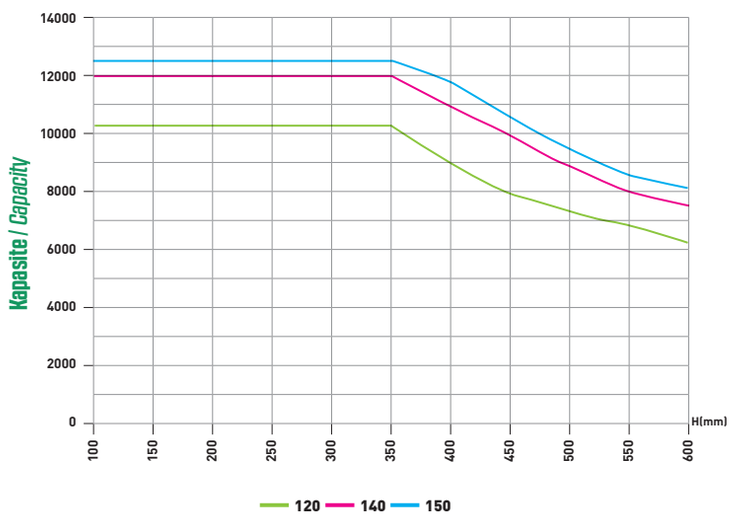

45 yılı aşkın tecrübe

Experience more than 45 years

ÇAYIROVA

Römork ve Treyler Ekipmanları
Trailer Equipments

CYR

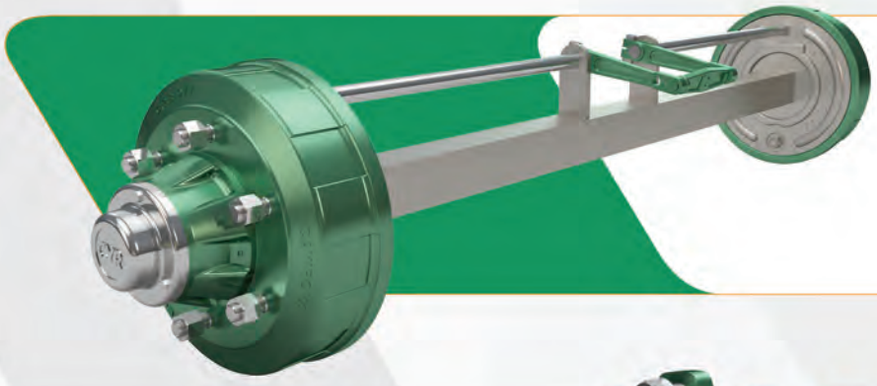

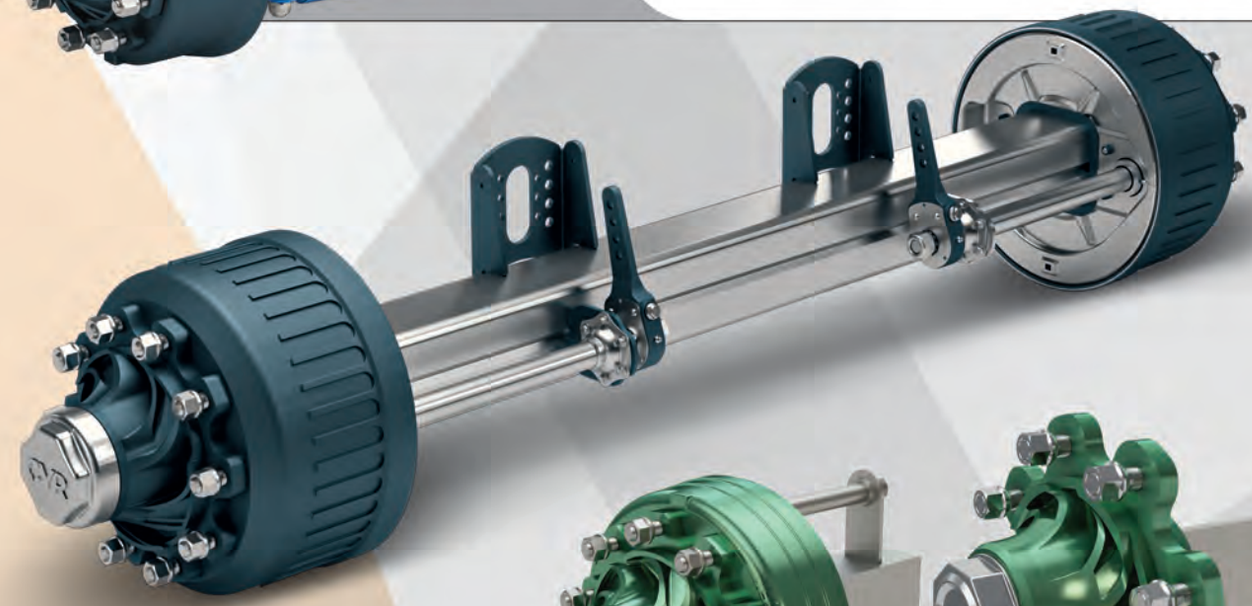

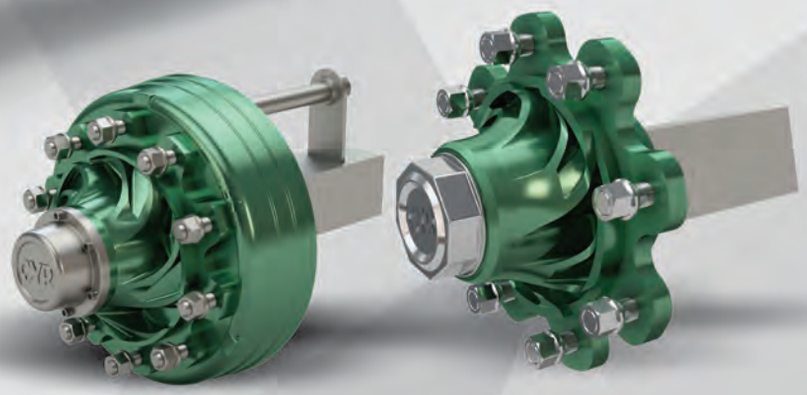

CAYIROVA
Römork ve Treyler Ekipmanları

101000

Frenli Dingil / *Braked Axles*

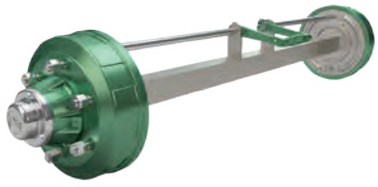

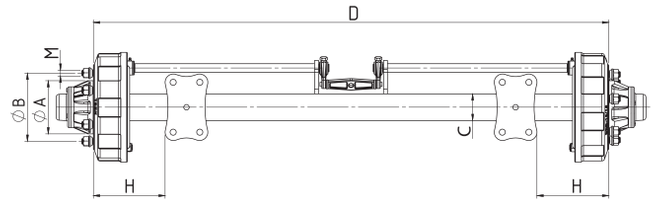

TSEK

Order Number Sipariş No	Bolt Bijon	Axis-C Akis-C	H	Bearing Size Rulman Ölçüsü	M	A (mm) A (mm)	B (mm) B (mm)	25km/h Kapasite-Kg Capacity-Kg			40km/h Kapasite-Kg Capacity-Kg			Track - D İz Boyu - D
Balata/Brake 130x30														
101010	4	50 □	180	30204/30205	M12	58	98	800	900	700	420	800	650	1.250
Balata/Brake 185x30														
101020	3-4	50 □	180	30204/30205	M12	58	98-149	900	1.000	800	800	900	720	1.250
Balata/Brake 200x50														
101030	5	40	220	30204/30207	M12	66	112	1.300	1.400	1.200	1.200	1.250	1.100	1.250
101040	5	50	240	30206/30208	M16	94	140	2.000	2.300	1.800	1.800	2.100	1.600	1.450
101050	5	50	240	30206/30208	M16	110	160	2.000	2.300	1.800	1.800	2.100	1.600	1.450
Balata/Brake 260x50														
101060	5	50	220	32207/32209	M16	110	160	3.000	3.400	2.700	2.700	3.100	2.400	1.450
101070	6	55	250	30208/302010	M18	160	205	3.800	4.300	3.400	3.400	3.900	3.100	1.550
Balata/Brake 300x60														
101090	6	60	230	32208/32210	M18	160	205	4.800	5.400	4.300	4.300	4.900	3.900	1.550
101095	6	60	250	32208/32211	M18	160	205	5.000	5.600	4.500	4.500	5.000	4.000	1.550
101097	6	65	250	32208/32211	M18	160	205	5.500	6.100	5.000	5.000	5.500	4.500	1.550
101100	6	60	240	32209/32211	M18	160	205	5.500	6.150	4.800	5.000	5.550	4.300	1.550
101110	6	65	240	32209/32211	M18	160	205	5.750	6.400	5.100	5.200	5.800	4.600	1.550
101113	6	70	240	32209/32211	M18	160	205	6.000	6.650	5.350	5.400	6.000	4.800	1.550
101120	6	70	250	32210/32212	M18	160	205	7.000	7.500	6.100	6.300	6.750	5.500	1.550
101123	6	70	250	32210/32212	M18	160	205	6.700	7.300	6.000	6.000	6.600	5.400	1.550
101125	6	70	260	32211/32213	M18	160	205	7.000	7.800	6.400	6.300	7.000	5.800	1.650
101130	6	80	250	32210/32212	M18	160	205	7.500	8.500	6.900	6.750	7.650	6.200	1.550
101135	6	80	280	32211/32213	M18	160	205	7.500	8.400	7.000	6.750	7.600	6.300	1.650
101137	6	90	320	32211/32213	M18	160	205	7.700	8.600	7.200	6.900	7.800	6.500	1.650
101194	8	80	240	"32211/32213 Monoblok"	M18	220	275	7.500	8.500	7.000	6.750	7.650	6.300	1.750
101195	8	80	280	32211/32213	M20	220	275	7.700	8.700	7.200	6.900	7.800	6.500	1.750
101174	8	90	320	32211/32213	M20	220	275	7.800	8.800	7.300	7.000	7.900	6.600	1.750
Balata/Brake 300x90														
101147	6	60	250	32208/32211	M18	160	205	6.500	7.150	6.300	5.900	6.400	5.700	1.550
101149	6	65	260	32208/32211	M18	160	205	6.750	7.300	6.500	6.100	6.600	5.900	1.550
101148	6	70	280	32210/32212	M18	160	205	7.250	8.000	7.000	6.500	7.200	6.750	1.550
101155	6	70	280	32211/32213	M18	160	205	7.500	8.250	7.250	7.000	7.500	6.500	1.650
101150	6	80	290	32211/32213	M18	160	205	8.000	8.800	7.400	7.200	7.900	6.700	1.650
101165	6	90	320	32213/32215	M18	160	205	9.000	10.000	8.500	8.100	9.000	7.700	1.650
101161	8	70	280	32211/32213	M20	220	275	7.700	8.500	7.300	7.200	8.000	6.750	1.750
101200	8	80	290	32211/32213	M20	220	275	8.000	9.000	7.400	7.200	8.100	6.700	1.750
101210	8	90	320	32211/32215	M20	220	275	9.000	10.000	8.500	8.100	9.000	7.700	1.750
Balata/Brake 300x135														
101187	6	90	290	32213/32215	M18	160	205	9.500	10.500	9.000	8.600	9.500	8.100	1.650
101162	8	80	320	32211/32213	M20	220	275	9.750	10.750	9.250	8.750	9.200	8.300	1.650
101129	8	90	340	32213/32216	M20	220	275	11.000	12.000	10.500	9.900	10.800	9.500	1.750
101319	10	100	350	33213/218248	M22	175	225	12.000	12.500	11.500	10.800	11.300	10.400	1.950

CYR Trailer Components

101000

Frenli Dingil / *Braked Axles*

TSEK

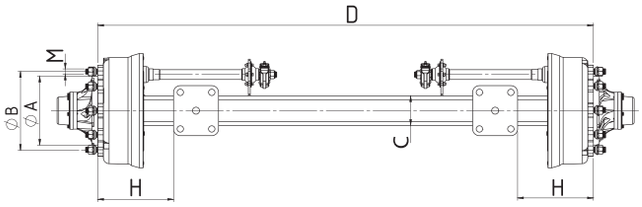

Order Number Sipariş No	Bolt Bijon	Axis-C Akis-C	H	Bearing Size Rulman Ölçüsü	M	A (mm) A (mm)	B (mm) B (mm)	25km/h Kapasite-Kg Capacity-Kg			40km/h Kapasite-Kg Capacity-Kg			Track - D İz Boyu - D
Balata/Brake 350x60														
101170	**6**	**80**	**280**	32211/32213	**M18**	160	205	8.000	8.800	7.400	7.200	7.900	6.700	1.650
101184	**6**	**90**	**290**	32213/32215	**M18**	160	205	9.000	10.000	8.500	8.100	9.000	7.700	1.650
101220	**8**	**80**	**280**	32211/32213	**M20**	220	275	8.000	9.000	7.400	7.200	8.100	6.700	1.750
101230	**8**	**90**	**320**	32211/32215	**M20**	220	275	9.500	10.500	9.000	8.600	9.500	8.100	1.750
Balata/Brake 350x80														
101235	**8**	**90**	**320**	32211/32215	**M20**	220	275	9.500	10.500	9.000	8.600	9.500	8.100	1.750
101236	**8**	**90**	**340**	32213/32216	**M20**	220	275	10.000	11.000	9.500	9.000	9.900	8.600	1.750
Balata/Brake 400x80														
101163	**8**	**80**	**320**	32211/32213	**M20**	220	275	9.000	10.000	8.500	8.200	8.800	7.850	1.750
101250	**8**	**90**	**320**	32211/32215	**M20**	220	275	9.250	10.200	8.750	8.400	9.250	8.000	1.750
101255	**8**	**90**	**340**	32213/32216	**M20**	220	275	9.750	10.700	9.250	8.750	9.700	8.250	1.850
101251	**8**	**100**	**320**	32211/32215	**M20**	220	275	10.000	11.000	9.750	9.000	9.750	8.750	1.850
101258	**8**	**120x12**	**340**	32213/32216	**M20**	220	275	10.250	11.250	10.000	9.200	10.000	9.000	1.850
101167	**10**	**90**	**340**	32213/32215	**M22**	280	335	9.750	10.750	9.250	8.750	9.750	8.400	1.850
101257	**10**	**90**	**340**	32213/32216	**M22**	280	335	10.250	11.250	9.750	9.250	10.200	8.750	1.950
101259	**10**	**100**	**340**	32213/32216	**M22**	280	335	11.250	12.250	10.750	10.200	11.000	9.700	1.950
101270	**10**	**100**	**380**	32213/32217	**M22**	280	335	11.750	12.750	11.250	10.500	11.500	10.200	1.950
101275	**10**	**120x12**	**380**	32213/32217	**M22**	280	335	12.250	13.250	11.750	11.000	12.000	10.500	1.950
101276	**10**	**130x14**	**380**	32213/32217	**M22**	280	335	12.500	13.500	12.000	11.300	12.200	10.800	1.950
Balata/Brake 400x120 T														
101261	**8**	**90**	**340**	32213/32216	**M20**	220	275	9.000	10.000	8.500	8.100	9.200	8.000	1.950
101262	**8**	**100**	**350**	32213/32216	**M20**	220	275	9.500	10.500	9.000	8.500	9.500	8.100	1.950
101263	**8**	**110x10**	**350**	32213/32216	**M20**	220	275	9.750	10.750	9.250	8.700	9.700	8.400	1.950
101264	**8**	**120x12**	**360**	32213/32216	**M20**	220	275	10.000	11.000	9.500	8.900	9.800	8.600	1.950
101185	**10**	**90**	**340**	32213/32215	**M22**	280	335	10.250	11.250	9.750	9.100	10.100	8.800	1.950
101265	**10**	**100**	**340**	32213/32216	**M22**	280	335	10.500	11.500	10.000	9.300	10.300	9.000	1.950
101186	**10**	**110x10**	**340**	32213/32215	**M22**	280	335	11.000	12.000	10.500	9.800	10.800	9.500	1.950
101266	**10**	**120x12**	**350**	32213/32216	**M22**	280	335	11.500	12.500	11.000	10.300	11.300	10.000	1.950
Balata/Brake 400x120 S														
101267	**8**	**120x12**	**340**	32213/32216	**M20**	220	275	11.000	12.000	10.500	9.900	10.800	9.500	1.950
101169	**10**	**90**	**340**	32213/32215	**M22**	280	335	11.500	12.500	11.000	10.400	11.200	10.000	1.950
101172	**10**	**90**	**340**	32213/32216	**M22**	280	335	12.000	13.000	11.500	10.900	11.800	10.500	1.950
101173	**10**	**120x12**	**350**	32213/32216	**M22**	280	335	12.500	13.500	11.800	11.300	12.300	10.900	1.950
101290	**10**	**100**	**380**	32213/32217	**M22**	280	335	12.600	13.600	12.200	11.400	12.400	11.000	1.950
101295	**10**	**120x12**	**380**	32213/32217	**M22**	280	335	12.800	13.800	12.300	11.500	12.500	11.000	1.950
101305	**10**	**140x14**	**380**	32213/32217	**M22**	280	335	13.250	14.250	12.750	12.000	13.000	11.500	1.950
101320	**10**	**150X15**	**380**	32215/33021	**M22**	280	335	14.250	15.250	13.750	12.800	13.800	12.500	2.050
Balata/Brake 420x200														
101330	**10**	**140x14**	**450**	32215/33021	**M22**	280	335	14.500	15.500	14.000	13.100	14.000	12.600	2.050
101340	**10**	**150x14**	**450**	32215/33021	**M22**	280	335	15.000	16.000	14.500	13.500	14.400	13.100	2.050
101350	**10**	**140x14**	**450**	33213/218248	**M22**	280	335	13.000	14.000	12.500	11.700	12.600	11.300	1.850
101360	**10**	**140x14**	**450**	33215/33019	**M22**	280	335	14.500	15.500	14.000	13.100	14.000	12.600	1.850
101370	**10**	**150x15**	**450**	32314/32222	**M22**	280	335	16.000	17.000	15.500	14.400	15.300	14.000	1.850
Balata/Brake 330x200														
101380	**10**	**140x14**	**450**	33213/218248	**M22**	175	225	12.000	13.000	11.500	10.800	11.700	10.400	1.850

ÇAYIROVA
Römork ve Treyler Ekipmanları

102000

Frensiz Dingil / Un-*Braked Axle*

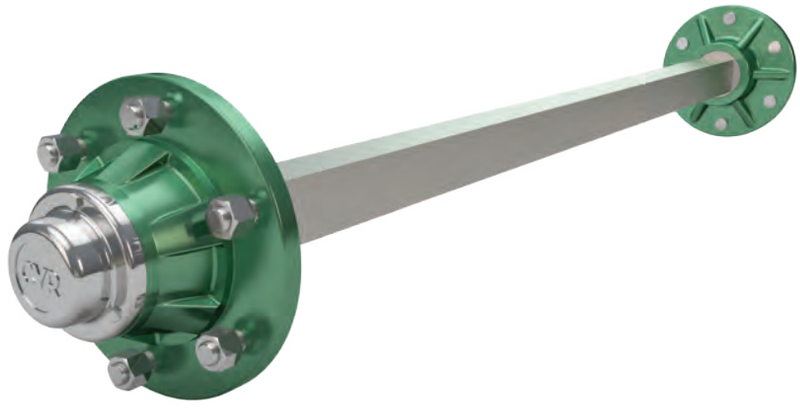

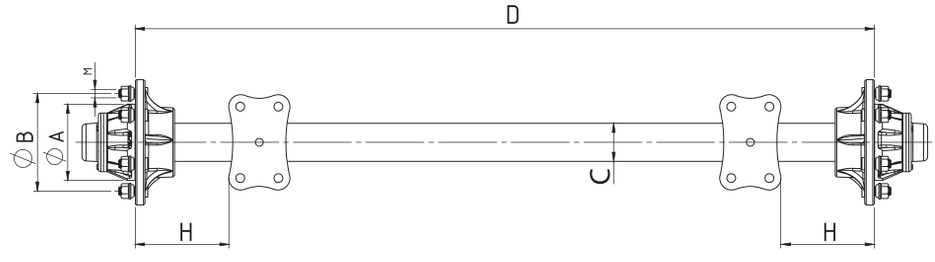

TSEK

Order Number	Bolt	Axis-C	H	Bearing Size	M	A (mm)	B (mm)	25km/h Kapasite-Kg Capacity-Kg			40km/h Kapasite-Kg Capacity-Kg			Track - D
Sipariş No	**Bijon**	**Akis-C**		**Rulman Ölçüsü**		**A (mm)**	**B (mm)**							**İz Boyu - D**
102010	**3-4**	**50 □**	**180**	30204/30205	**M12**	58	98-149	800	900	700	720	820	650	1.250
102020	**4**	**50 □**	**180**	30204/30205	**M12**	58	98	900	1.000	800	820	900	720	1.250
102025	**5**	**40**	**200**	30204/30207	**M12**	66	112	1.300	1.400	1.200	1.200	1.250	1.100	1.250
102042	**5**	**50**	**200**	30206/30207	**M16**	94	140	1.900	2.100	1.800	1.700	1.900	1.600	1.450
102040	**5**	**50**	**200**	30206/30207	**M16**	110	160	1.900	2.100	1.800	1.700	1.900	1.600	1.450
102052	**5**	**50**	**200**	30206/30209	**M16**	94	140	2.500	2.800	2.200	2.250	2.500	2.000	1.450
102056	**5**	**50**	**200**	30206/30209	**M16**	110	160	2.750	3.050	2.450	2.500	2.750	2.200	1.450
102075	**5**	**50**	**210**	32207/32209	**M16**	110	160	3.000	3.400	2.700	2.700	3.100	2.400	1.450
102080	**5**	**50**	**210**	32207/32209	**M16**	110	160	3.000	3.400	2.700	2.700	3.100	2.400	1.450
102095	**5**	**50**	**210**	⚒ 32207/32209	**M16**	110	160	3.100	3.500	2.800	2.800	3.150	2.500	1.450
102115	**6**	**50**	**200**	30206/30209	**M18**	160	205	3.000	3.400	2.700	2.700	3.100	2.400	1.450
102120	**6**	**50**	**210**	32207/32209	**M18**	160	205	3.200	3.600	2.900	2.900	3.250	2.600	1.550
102125	**6**	**60**	**200**	30207/30210	**M18**	160	205	3.400	3.800	3.100	3.100	3.400	2.800	1.450
102140	**6**	**60**	**230**	32208/32210	**M18**	160	205	4.800	5.400	4.300	4.300	4.900	3.900	1.550
102143	**6**	**60**	**210**	32208/32210	**M18**	160	205	4.900	5.500	4.400	4.400	5.000	4.000	1.550
102150	**6**	**60**	**210**	⚒ 32208/32210	**M18**	160	205	5.000	5.600	4.500	4,500	5.100	4.100	1.550
102155	**6**	**60**	**250**	32208/32211	**M18**	160	205	5.250	5.900	4.650	4.700	5.300	4.200	1.550
102160	**6**	**60**	**240**	32209/32211	**M18**	160	205	5.500	6.150	4.800	5.000	5.500	4.300	1.550
102170	**6**	**65**	**240**	32209/32211	**M18**	160	205	5.750	6.400	5.100	5.200	5.750	4.600	1.550
102180	**6**	**70**	**240**	32209/32211	**M18**	160	205	6.000	6.650	5.350	5.400	6.000	4.800	1.550
102200	**6**	**70**	**250**	32210/32212	**M18**	160	205	6.500	7.250	5.750	5.900	6.500	5.200	1.550
102210	**6**	**80**	**250**	32210/32212	**M18**	160	205	7.500	8.250	6.800	6.750	7.400	6.100	1.550

⚒ Dövme / *Forged*

102000

Frensiz Dingil / *Un-Braked Axle*

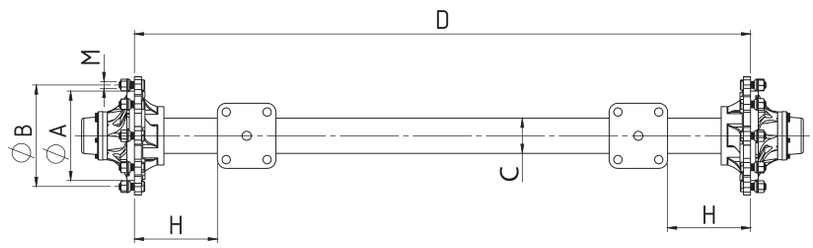

TSEK

Order Number Sipariş No	Bolt Bijon	Axis-C Akis-C	H	Bearing Size Rulman Ölçüsü	M	A (mm) A (mm)	B (mm) B (mm)	25km/h Kapasite-Kg Capacity-Kg			40km/h Kapasite-Kg Capacity-Kg			Track - D İz Boyu - D
102203	6	70	250	32210/32212	M18	160	205	6.700	7.300	6.000	6.000	6.600	5.400	1.550
102205	6	70	280	32211/32213	M18	160	205	7.000	7.750	6.350	6.300	7.000	5.700	1.650
102215	6	80	280	32211/32213	M18	160	205	8.000	8.750	7.300	7.200	7.900	6.600	1.650
102224	6	90	290	32213/32215	M18	160	205	8.500	9.500	8.000	7.500	7.900	7.100	1.650
102220	8	80	280	32211/32213	M20	220	275	10.000	11.000	9.500	9.000	9.900	8.600	1.750
102230	8	90	320	32211/32215	M20	220	275	8.750	9.750	8.500	7.750	8.100	7.400	1.750
102235	8	90	340	32213/32216	M20	220	275	10.500	11.500	10.000	9.500	10.400	9.000	1.750
102246	8	110x10	340	32213/32216	M20	220	275	10.800	11.700	10.250	10.000	10.900	9.500	1.750
102233	10	90	340	32213/32215	M22	280	335	10.500	11.000	10.000	9.500	9.900	9.000	1.950
102234	10	110x10	340	32213/32215	M22	280	335	11.000	12.000	10.500	10.000	10.400	9.500	1.950
102234-1	10	120x12	340	32213/32215	M22	280	335	11.500	12.500	11.000	10.500	10.900	10.000	1.950
102240	10	90	340	32213/32216	M22	280	335	11.000	12.000	10.500	9.900	10.800	9.500	1.950
102239	10	100	350	33213/218248	M22	175	225	12.000	12.500	11.500	10.800	11.300	10.400	1.950
102245	10	100	340	32213/32216	M22	280	335	11.500	12.000	11.000	10.400	10.800	9.900	1.950
102247	10	110x10	340	32213/32216	M22	280	335	11.500	12.500	11.000	10.500	10.900	10.000	1.950
102248	10	120x12	340	32213/32216	M22	280	335	12.000	13.000	11.500	11.000	11.400	10.400	1.950
102250	10	100	380	32213/32217	M22	280	335	12.500	13.500	12.000	11.250	12.200	10.800	1.950
102255	10	120x12	380	32213/32217	M22	280	335	12.500	13.000	12.000	11.250	11.700	10.800	1.950
102265	10	140x14	380	32213/32217	M22	280	335	13.000	14.000	12.500	11.700	12.600	11.250	1.950
102275	10	140x14	380	32215/33021	M22	280	335	14.000	15.000	13.500	12.600	13.500	12.200	2.050
102280	10	150x15	380	32215/33021	M22	280	335	15.000	16.000	14.500	13.500	14.400	13.000	2.050

ÇAYIROVA
Römork ve Treyler Ekipmanları

TSEK

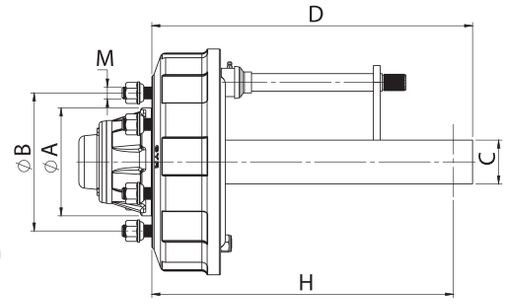

103000

Montajlı Kampana / *Braked Stub Axle*

Order Number Sipariş No	Bolt Bijon	Axis-C Akis-C	H	Bearing Size Rulman Ölçüsü	M	Centre Hole-A Jant Göbeği-A	Bolt Center-B Bijon Merkezi-B	Capacity - Kg Kapasite - Kg	Track - D İz Boyu - D
Balata/Brake 130x30									
103010	**4**	**32Ø**	**180**	30204/30205	**M12**	58	98	450	145
Balata/Brake 185x30									
103030	**3-4**	**32Ø**	**180**	30204/30205	**M12**	58	98-149	500	145
Balata/Brake 200x50									
103050	**5**	**40Ø**	**220**	30204/30207	**M12**	66	112	700	160
103060	**5**	**50Ø**	**240**	30206/30208	**M16**	94	140	1.150	195
103070	**5**	**50Ø**	**240**	30206/30208	**M16**	110	160	1.150	195
Balata/Brake 260x50									
103080	**5**	**50Ø**	**220**	32207/32209	**M16**	110	160	1.700	195
103090	**5**	**50Ø**	**220**	32207/32209	**M16**	110	160	1.700	195
103100	**6**	**55Ø**	**250**	30208/302010	**M18**	160	205	2.000	215
103110	**6**	**55Ø**	**250**	30208/302010	**M18**	160	205	2.000	215
Balata/Brake 300x60									
103140	**6**	**60Ø**	**230**	32208/32210	**M18**	160	205	2.700	250
103150	**6**	**60Ø**	**230**	32208/32210	**M18**	160	205	2.700	250
103155	**6**	**60Ø**	**250**	32208/32211	**M18**	160	205	2.800	245
103160	**6**	**60Ø**	**240**	32209/32211	**M18**	160	205	3.100	250
103170	**6**	**60Ø**	**240**	32209/32211	**M18**	160	205	3.100	250
103180	**6**	**65Ø**	**250**	32210/32212	**M18**	160	205	3.500	250
103185	**6**	**65Ø**	**250**	32210/32212	**M18**	160	205	3.650	240
103187	**6**	**70Ø**	**250**	32210/32212	**M18**	160	205	3.900	240
103190	**6**	**70Ø**	**250**	32210/32212	**M18**	160	205	3.750	250
103192	**6**	**70Ø**	**260**	32211/32213	**M18**	160	205	3.900	290
103194	**6**	**80Ø**	**280**	32211/32213	**M18**	160	205	3.900	290
103250	**8**	**80Ø**	**280**	32211/32213	**M20**	220	275	4.100	290

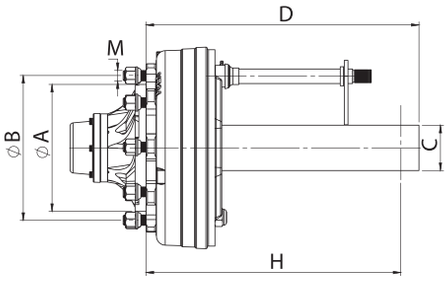

103000

Montajlı Kampana / *Braked Stub Axle*

TSEK

Order Number Sipariş No	Bolt Bijon	Axis-C Akis-C	H	Bearing Size Rulman Ölçüsü	M	Centre Hole-A Jant Göbeği-A	Bolt Center-B Bijon Merkezi-B	Capacity - Kg Kapasite - Kg	Track - D İz Boyu - D
Balata/Brake 300x90									
103196	**6**	**70Ø**	**250**	32208/32211	**M18**	160	205	3.600	350
103200	**6**	**70Ø**	**280**	32211/32213	**M18**	160	205	4.200	340
103210	**6**	**80Ø**	**280**	32211/32213	**M18**	160	205	4.400	340
103212	**6**	**90Ø**	**290**	32213/32215	**M18**	160	205	5.250	375
103260	**8**	**80Ø**	**280**	32211/32213	**M20**	220	275	4.500	340
103270	**8**	**90Ø**	**320**	32211/32215	**M20**	220	275	5.000	380
Balata/Brake 300x135									
103234	**6**	**90Ø**	**290**	32213/32215	**M18**	160	205	5.700	375
103278	**8**	**90Ø**	**340**	32213/32216	**M20**	220	275	6.000	355
Balata/Brake 350x60									
103220	**6**	**80Ø**	**280**	32211/32213	**M18**	160	205	4.400	290
103230	**6**	**90Ø**	**280**	32211/32213	**M18**	160	205	4.750	290
103280	**8**	**80Ø**	**280**	32211/32213	**M20**	220	275	4.500	290
103290	**8**	**90Ø**	**320**	32211/32215	**M20**	220	275	5.250	380
Balata/Brake 350x80									
103298	**8**	**80Ø**	**340**	32213/32216	**M20**	220	275	5.500	355
103305	**8**	**90Ø**	**320**	32211/32215	**M20**	220	275	5.250	380
Balata/Brake 400x80									
103310	**8**	**90Ø**	**320**	32211/32215	**M20**	220	275	5.000	380
103315	**8**	**90Ø**	**340**	32213/32216	**M20**	220	275	5.250	355
103240	**10**	**90Ø**	**340**	32213/32215	**M22**	280	335	5.300	375
103317	**10**	**90Ø**	**340**	32213/32216	**M22**	280	335	5.500	385
103330	**10**	**100Ø**	**380**	32213/32217	**M20**	280	335	6.250	345
Balata/Brake 400x120 T									
103318	**8**	**90Ø**	**340**	32213/32216	**M20**	220	275	5.500	355
103342	**10**	**90Ø**	**340**	32213/32215	**M22**	280	335	6.000	425
103341	**10**	**100Ø**	**380**	32213/32217	**M22**	280	335	6.500	395
Balata/Brake 400x120 S									
103316	**8**	**90Ø**	**340**	32213/32216	**M20**	220	275	5.750	355
103241	**10**	**90Ø**	**340**	32213/32215	**M22**	280	335	6.000	425
103340	**10**	**100Ø**	**380**	32213/32217	**M22**	280	335	6.750	395
103350	**10**	**120Ø**	**380**	32215/33021	**M22**	280	335	7.250	400
Balata/Brake 420x200									
103360	**10**	**120Ø**	**450**	32215/33021	**M22**	280	335	7.500	500

ÇAYIROVA
Römork ve Treyler Ekipmanları

104000

Montajlı Porya / *Un-Braked Stub Axle*

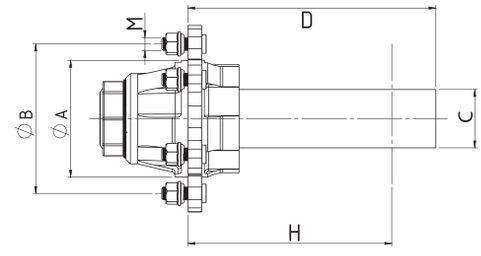

TSEK

Order Number Sipariş No	Bolt Bijon	Axis-C Akis-C	H	Bearing Size Rulman Ölçüsü	M	Centre Hole-A Jant Göbeği-A	Bolt Center-B Bijon Merkezi-B	Capacity-Kg Kapasite-Kg	Track - D İz Boyu - D
104010	3-4	32 Ø	180	30204/30205	M12	58	149-98	450	140
104030	4	32 Ø	180	30204/30205	M12	58	98	500	140
104040	4	30 ▯	180	30204/30205	M12	58	98	500	140
104045	5	40 Ø	200	30204/30207	M12	66	112	700	165
104049	5	40 Ø	200	30206/30207	M16	94	140	1.050	150
104050	5	40 Ø	200	30206/30207	M16	110	160	1.050	150
104060	5	40 Ø	200	30206/30207	M16	110	160	1.050	150
104100	5	50 ▯	200	30206/30209	M16	94	140	1.400	180
104102	5	50 Ø	200	30206/30209	M16	110	160	1.500	180
104105	5	50 ▯	200	30206/30209	M16	110	160	1.500	180
104126	5	50 Ø	210	32207/32209	M16	110	160	1.700	185
104127	5	50 ▯	210	32207/32209	M16	110	160	1.700	185
104130	5	50 Ø	210	32207/32209	M16	110	160	1.700	190
104140	5	50 ▯	210	32207/32209	M16	110	160	1.700	190
104155	5	50 Ø	210	32207/32209	M16	110	160	1.750	185
104160	5	50 ▯	210	32207/32209	M16	110	160	1.750	185
104175	6	50 Ø	200	30206/30209	M18	160	205	1.700	195
104176	6	50 ▯	210	32207/32209	M18	160	205	1.800	190
104195	6	55 Ø	200	30207/30210	M18	160	205	1.900	190
104220	6	55 Ø	230	32208/32210	M18	160	205	2.700	255
104230	6	55 ▯	230	32208/32210	M18	160	205	2.700	255
104238	6	55 Ø	210	32208/32210	M18	160	205	2.750	260
104239	6	60 ▯	210	32208/32210	M18	160	205	2.750	260
104240	6	55 Ø	210	32208/32210	M18	160	205	2.800	260
104250	6	60 ▯	210	32208/32210	M18	160	205	2.800	260
104255	6	60 ▯	250	32208/32211	M18	160	205	2.950	245
104260	6	60 Ø	240	32209/32211	M18	160	205	3.050	250
104270	6	60 ▯	240	32209/32211	M18	160	205	3.050	250
104280	6	65 ▯	240	32209/32211	M18	160	205	3.200	250
104300	6	65 ▯	250	32210/32212	M18	160	205	3.400	245
104305	6	65 ▯	250	32210/32212	M18	160	205	3.500	240
104310	6	70 ▯	250	32210/32212	M18	160	205	3.600	245
104313	6	70 ▯	250	32210/32212	M18	160	205	3.700	240
104315	6	70 ▯	280	32211/32213	M18	160	205	3.750	230
104316	6	80 ▯	280	32211/32213	M18	160	205	4.200	230
104317	6	90 ▯	290	32213/32215	M18	160	205	5.500	275
104320	8	80 ▯	280	32211/32213	M20	220	275	5.500	230
104330	8	90 ▯	320	32211/32215	M20	220	275	5.000	280
104335	8	90 ▯	340	32213/32216	M20	220	275	5.800	275
104336	10	90 ▯	340	32213/32215	M22	280	335	5.500	375
104337	10	90 ▯	340	32213/32216	M22	280	335	6.000	305
104350	10	100 ▯	380	32213/32217	M22	280	335	6.700	345
104360	10	120 Ø	380	32215/33021	M22	280	335	7.250	350

Dövme / *Forged*

104400

Montajlı Porya Ofsetli

Offset Stub Axles

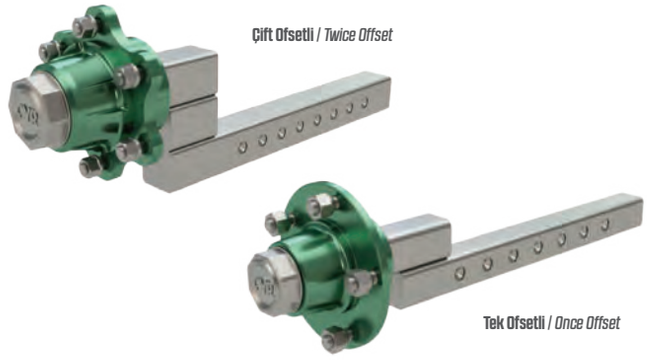

Çift Ofsetli / *Twice Offset*

Tek Ofsetli / *Once Offset*

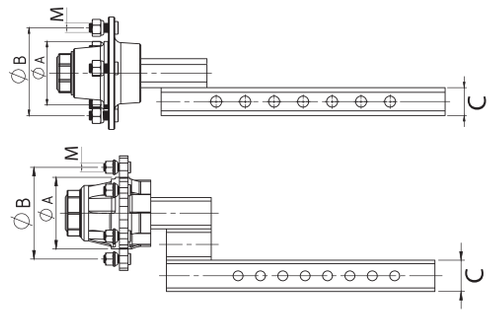

Order Number **Sipariş No**	Bolt **Bijon**	Axis-C **Akis-C**	Bearing Size **Rulman Ölçüsü**	**M**	Centre Hole-A **Jant Göbeği-A**	Bolt Center-B **Bijon Merkezi-B**	Capacity-Kg **Kapasite-Kg**
104101	**5**	**50**	30206/30209	**M16**	94	140	1.300
104128	**5**	**50**	32207/32209	**M16**	110	160	1.500
104165	**5**	**50**	32207/32209	**M16**	110	160	1.700
104245	**6**	**60**	32208/32210	**M18**	160	205	2.600
104312	**6**	**70**	32210/32212	**M18**	160	205	3.400
104321	**6**	**70**	32211/32213	**M18**	160	205	3.700
104322	**8**	**70**	32211/32213	**M20**	220	275	3.900

104750

Diskaro Poryası

Disc Harrow Hub

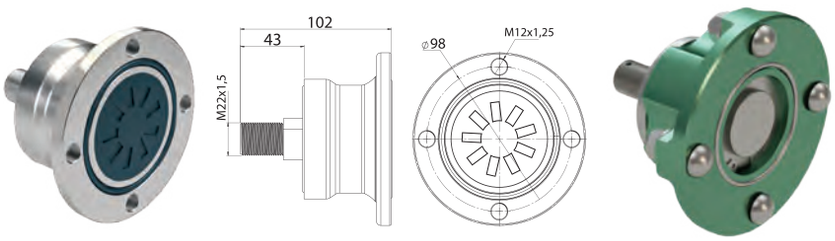

İthal Model / *Imported Model*

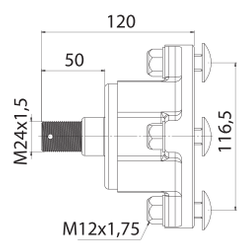

Yivli Model / *Groved Model*

Order Number **Sipariş No**	Type **Tip**
104760	**Düz Model** Standard Model
104770	**Yivli Model** Tapped Model
154865	**İthal Model** Imported Model

154880

Diskaro Poryası Set

Disc Harrow Hub Set

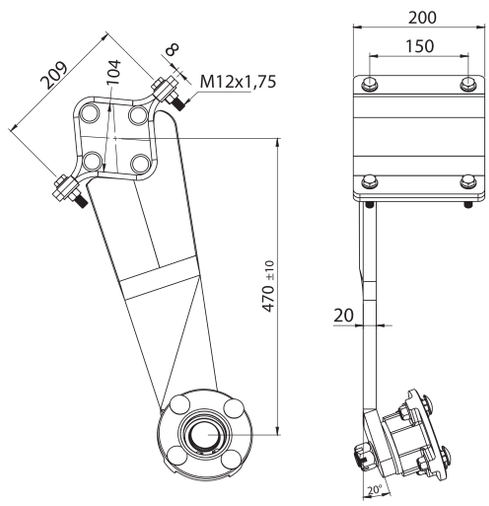

Order Number **Sipariş No**	Type **Tip**
154880	**Sağ** / Right
154885	**Sol** / Left

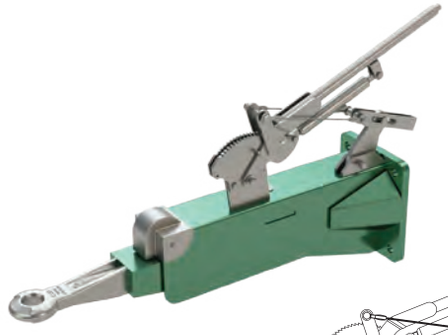

124000

Atalet Fren Sistemi / Overrun Brake Systemm

Order Number Sipariş No	Vertical Load (kg) Dikey Yük (kg)	Capacity Kapasite
124090	1.600	**6.000**
124100	1.800	**8.000**

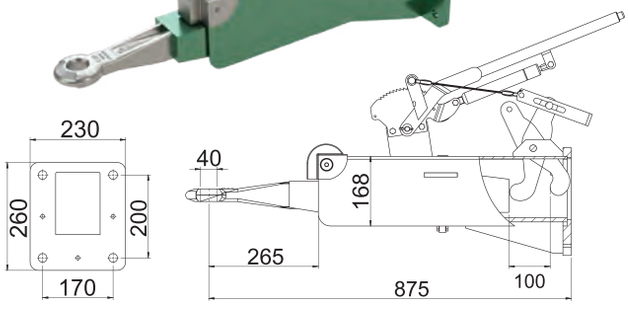

- Tek ve tandem dingilli tarım römorklarınada kullanılır.
- Bu çeki özel frenli dingillere bağlanmak için kullanılır.
- Amortisörler tarafından desteklenmiştir.
- Hidrolik veya pnömatik uygulama gerektirmez.
- Eğimli arazilerde elfreni görevi görür.
- Maksimum 40 km hızda kullanılır.

- Used in agricultural trailers with single or tandem axles.
- This drawer is used for connecting to axles with overrun brake function.
- Supported by shock absorbers.
- Hydraulic or pneumatic application is not required.
- It serves as an handbrake in inclined terrains.
- Allowed maximum speed 40 km/h.

124900

Hazır Ok Atalet Fren Sistemli

Towing Eye For Overrun Brake

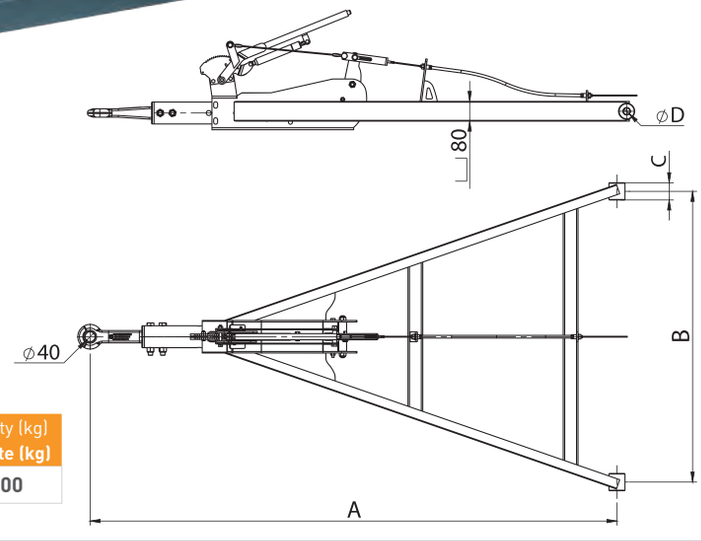

Order Number Sipariş No	Stroke (mm) Strok (mm)	A (mm) Min.	 Max.	B (mm) Min.	 Max.	C (mm) Min.	 Max.	D (mm) Min.	 Max.	Capacity (kg) Kapasite (kg)
124930	120	1.800	2.100	950	1.300	60	100	26	30	**8.000**

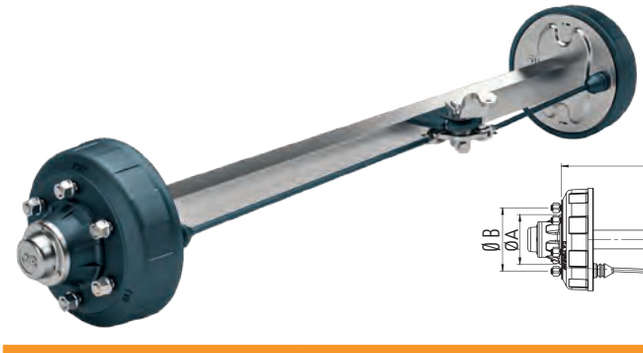

101500

Ataletli Dingil / Overrun Axle

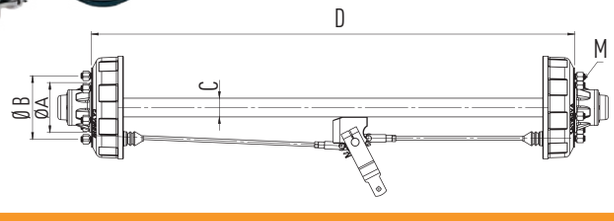

Order Number Sipariş No	Square-C Kare-C	Bearing Size Rulman Ölçüsü	Capacity / Kapasite 25 km/h	Capacity / Kapasite 40 km/h	Brake Lining Balata	Bolt Bijon	Centre Hole-A Jant Göbeği-A	Bolt Center-B Bijon Merkezi-B
101501	**60**	32208-32210	5.400	4.900	300-60	**6xM18**	160	205
101502	**70**	32209-32211	6.650	6.000	300-60	**6xM18**	160	205
101506	**80**	32211-32213	8.800	7.900	300-90	**6xM18**	160	205
101510	**80**	32211-32213	9.000	8.100	300-90	**8xM20**	220	275

FREN BALATALARIMIZIN TEST SONUÇLARI
TEST RESULT FOR OUR BRAKE LINING

Brake Lining Balata Ölçüsü	25 km/h Kg	R (mm)	40 km/h Kg	R (mm)	60 km/h Kg	R (mm)	ECE-R13.11 Karayolları-O Highways-O	EU 2015/68 Tarım - R Agriculture - R
260/50			2600	436			LCTR 1381 003 19	LC 1381 002 18
300/60	5500	447					TSS378308	
			3420	447			TSS378309	TST415851
350/60	4600	455					TÜV 361-060-10	
			3600	430			TÜV 361-060-10	
350/80	6500	505					TÜV 361-157-12	
			5500	505			TÜV 361-158-12	
					4500	505	TÜV 361-145-12	
300/90	7520	465					TSS378310	
			7000	465			TSS378311	LCTR 1381 006 19
					7000	465	TSS378312	
400/80	11200	465					TSS378313	
			7500	515			TSS378314	LCTR 1381 007 19
					7500	515	TSS378315	
300/135			9500	465				
					9500	465	LC 1381 001 22	
400/120	11840	465					TSS378316	
			9700	465			TSS378317	TST415854
					8840	465	TSS378318	
420/200			12180	555	12180	555	LCTR 1381 004 18	LC 1381 003 18

R: Lastik yuvarlanma yarı çapı / Tire radius

107250

Fren Balatası - Takım / *Brake Lining - Set*

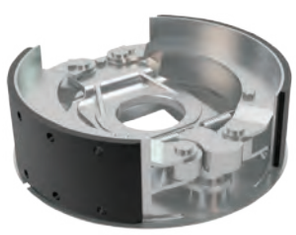

Standart / *Standard*

Order Number Sipariş No	Size (mm) Ölçü (mm)	km / h
107354	200x50	25-40-60
107340	260x50	25-40
107355	300x60	25-40
107360	300x90	25-40-60
107370	350x60	25-40-60
107375	350x80	25-40-60
107380	400x80	25-40-60
107391	400x120T	25-40-60

Ağır Tonaj / *High Tonnage*

Order Number Sipariş No	Size (mm) Ölçü (mm)	km / h
107367	300x135 S	25-40-60
107390	400x120 S	25-40-60
107395	420x200 S	80

Hidrolik Model / *Hydraulic Model*

Order Number Sipariş No	Size (mm) Ölçü (mm)
107250	200x50
107252	300x90

Ataletli Model / *Overrun Model*

Order Number Sipariş No	Size (mm) Ölçü (mm)
107385	200x50
107386	300x60
107387	300x90

108060

Bağımsız Dönen Dingil Sistemi - Sarhoş

Self Steering Axle System

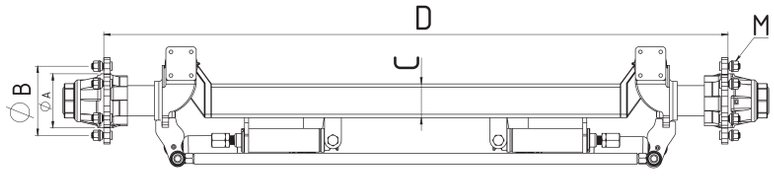

Order Number Sipariş No	Profile C (mm) Profil C (mm)	Bearing Rulman	Capacity / Kapasite 25 km/h	Capacity / Kapasite 40 km/h	Bolt Bijon	Centre Hole-A Jant Göbeği-A	Bolt Center-B Bijon Merkezi-B
102214+108060	**100**	32211-32213	6.500	6.000	**6xM18**	160	205
102236+108070	**120**	32213-32216	10.500	9.500	**8xM20**	220	275
102255+108070	**120**	32213-32217	12.000	10.800	**10xM22**	280	335
102275+108070	**140**	32215-33021	13.000	12.000	**10xM22**	280	335

108065

Bağımsız Dönen Dingil Sistemi - Sarhoş (Frenli)

Self Steering Axle System (Braked)

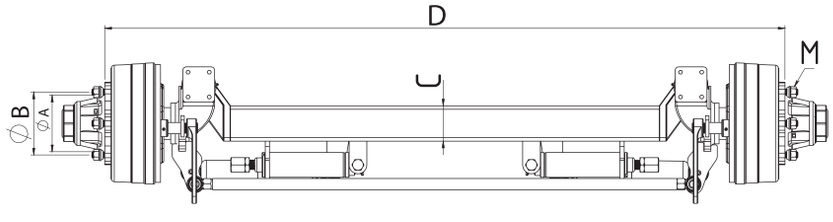

Order Number Sipariş No	Profile C (mm) Profil C (mm)	Brake Fren	Bearing Rulman	Capacity / Kapasite 25 km/h	Capacity / Kapasite 40 km/h	Bolt Bijon	Centre Hole-A Jant Göbeği-A	Bolt Center-B Bijon Merkezi-B
101136+108060	**100**	300x60	32211-32213	6.000	5.500	**6xM18**	160	205
101154+108060	**100**	300x90	32211-32213	6.500	6.000	**6xM18**	160	205
101153+108060	**100**	300x90	32211-32213	7.000	6.500	**8xM20**	220	275
101258+108070	**120**	400X80	32213-32216	10.500	9.500	**8xM20**	220	275
101186+108070	**110**	400X120	32213-32215	11.800	10.600	**10xM22**	280	335
101295+108070	**120**	400X120	32213-32217	12.000	10.800	**10xM22**	280	335
101330+108070	**140**	420X200	32215-33021	13.000	12.000	**10xM22**	280	335

108120

Hidrolik Dönen Dingil Sistemi / Çift Liftli

Hdraulic Steering Axle Set / Double Lift

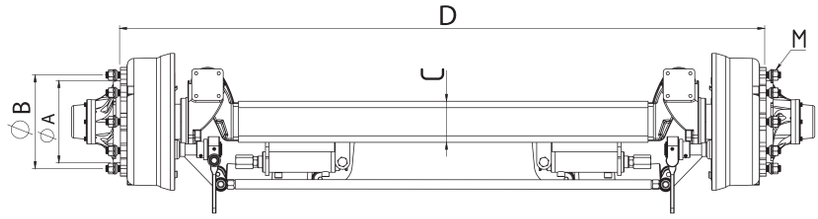

Order Number **Sipariş No**	Profile C (mm) **Profil C (mm)**	Brake **Fren**	Bearing **Rulman**	Capacity / Kapasite **25 km/h**	Capacity / Kapasite **40 km/h**	Bolt **Bijon**	Centre Hole-A **Jant Göbeği-A**	Bolt Center-B **Bijon Merkezi-B**
101154+108120	**100**	300x90	32211/32213	6.000	5.500	**6xM18**	160	205
101153+108120	**100**	300x90	32211/32213	6.750	6.200	**8xM20**	220	275
101258+108130	**120**	400X80	32213-32216	10.500	9.500	**8xM20**	220	275
101186+108130	**110**	400X120	32213-32215	11.800	10.600	**10xM22**	280	335
101295+108130	**120**	400x120	32213/32217	12.000	10.800	**10xM22**	280	335
101330+108130	**140**	420x200	32215/33021	13.000	12.000	**10xM22**	280	335

A1, A2, A3, A4	**Akümülatör /** Accumulator
M1, M2, M3, M4	**Manometre /** Manometer
V1, V2, V3, V4	**Küresel Vana /** Globe Valve
PM	**El Pompası /** Hand Pump
	Yön Lifti / Direction Cylinder

108135

Hidrolik Ekipmanları

Hydraulic Equipments

Bu sistemde, hidrolik dönen dingil sistemi hareketini römorkun önündeki ok başına bağlanan yön liftinden alır. 2 Dingilli römorklarda arkadaki dingile, 3 dingilli römorklarda en ön ve en arkadaki dingile uygulanır.

On the hydraulic steering axle system the axle gets its motion from the direction cylinder mounted to the towing eye. On tandem system the hydraulic steering axle has to be mounted on the rear and on Tridem trailer systems the front and rear axles has to be a hydraulic steering axle.

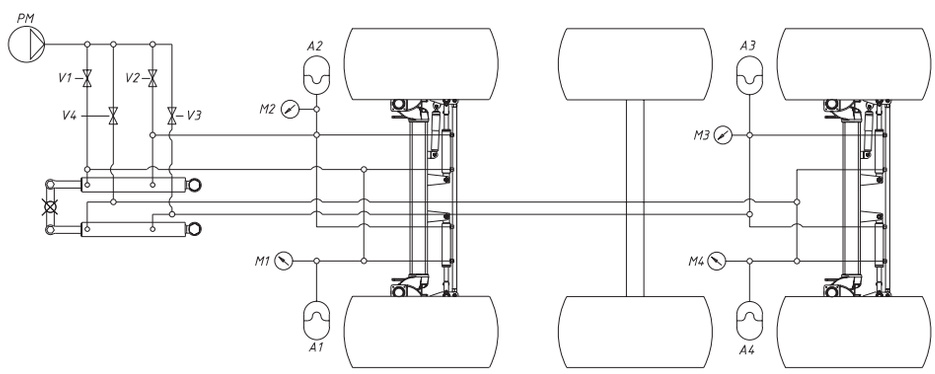

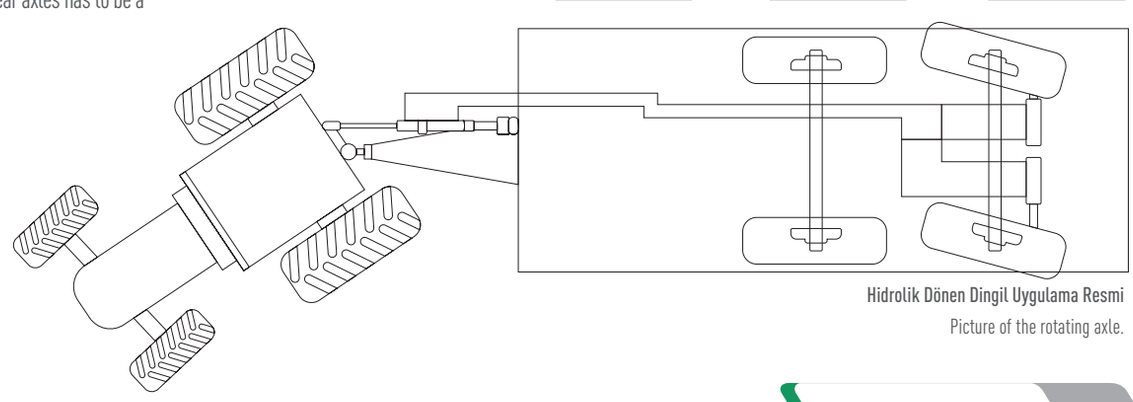

Hidrolik Dönen Dingil Uygulama Resmi

Picture of the rotating axle.

108150

Hidrolik Dönen Dingil Sistemi / Tek Liftli

Hdraulic Steering Axle Set / Single Lift

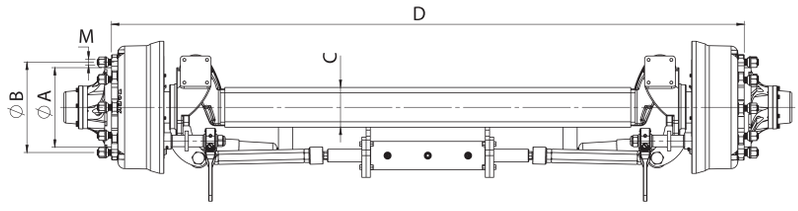

Order Number Sipariş No	Profile C (mm) Profil C (mm)	Brake Fren	Bearing Rulman	Capacity / Kapasite 25 km/h	Capacity / Kapasite 40 km/h	Bolt Bijon	Centre Hole-A Jant Göbeği-A	Bolt Center-B Bijon Merkezi-B
101154+108155	**100**	300x90	32211/32213	6.000	5.500	**6xM18**	160	205
101153+108155	**100**	300x90	32211/32213	6.750	6.200	**8xM20**	220	275
101258+108165	**120**	400X80	32213-32216	10.500	9.500	**8xM20**	220	275
101186+108165	**110**	400X120	32213-32215	11.800	10.600	**10xM22**	280	335
101295+108165	**120**	400x120	32213/32217	12.000	10.800	**10xM22**	280	335
101330+108165	**140**	420x200	32215/33021	13.000	12.000	**10xM22**	280	335

108200

Mekanik Dönen Dingil Sistemi

Mechanic Steering Axle System

Dingil Hariç / *Without Axle*

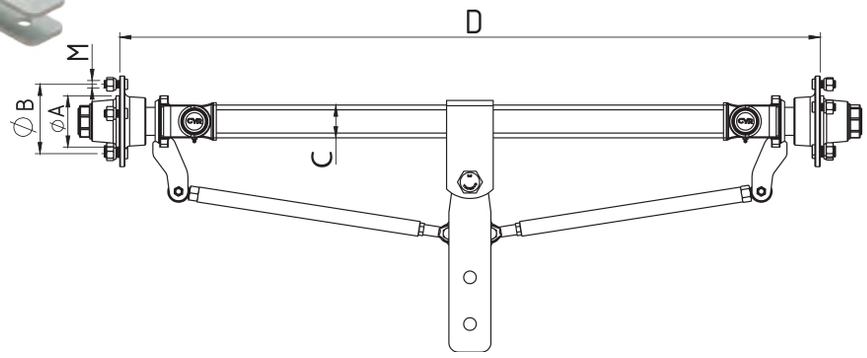

Order Number Sipariş No	Profile C (mm) Profil C (mm)	Bearing Rulman	Capacity / Kapasite 25 km/h	Capacity / Kapasite 40 km/h	Bolt Bijon	Centre Hole-A Jant Göbeği-A	Bolt Center-B Bijon Merkezi-B
101020+108220	**70**	30204/30205	1.100	1.000	**4xM12**	58	98
102052+108220	**70**	30206/30209	2.800	2.500	**5xM16**	94	140
102075+108220	**70**	32207/32209	3.000	2.700	**5xM16**	110	160
102136+108220	**80**	32208/32210	3.500	3.200	**6xM18**	160	205
102173+108230	**90**	32209/32211	6.000	5.400	**6xM18**	160	205
102214+108230	**100**	32211/32213	6.500	6.000	**6xM18**	160	205
102217+108230	**100**	32211/32213	6.800	6.200	**8xM20**	220	275

Sistemde : Dönen dingil dökümleri, oynar başlık, rot kolu, rot başı, yön bağlantı demiri bulunmaktadır. Mekanik dönen dingil kullanılan römorklarda döner tabla kullanılmasına gerek yoktur. Mekanik dönen dingil hareketini traktörden alır.

System: Steering axle castings, moveable heads, tie rod, joint rod. There is no need to use a turntable on a mechanical system. The Mechanical rotating axle system takes its motion directly from the tractor.

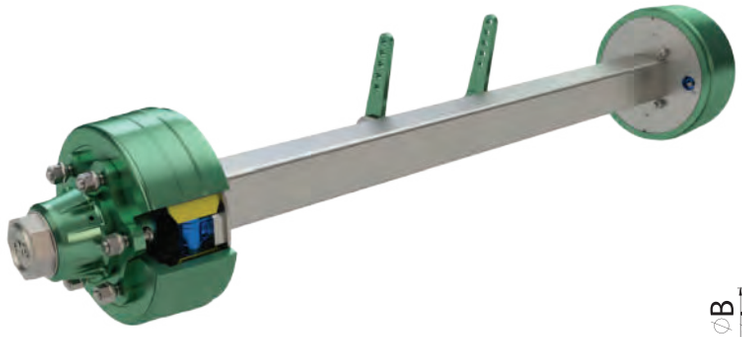

101600

Hidrolik Frenli Dingil
Hydraulic Brake Axle

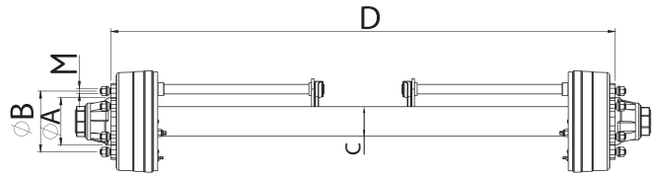

Order Number Sipariş No	Bolt Bijon	Axis-C Akis-C	H	Bearing Size Rulman Ölçüsü	M	A (mm) A (mm)	B (mm) B (mm)	25km/h Kapasite-Kg Capacity-Kg			40km/h Kapasite-Kg Capacity-Kg			Track - D İz Boyu - D
Balata/Brake 300x90														
101610	**6**	**70**	**280**	32211/32213	**M18**	160	205	7.500	8.250	7.250	7.000	7.500	6.500	1.650
101620	**6**	**90**	**290**	32213/32215	**M18**	160	205	9.000	10.000	8.500	8.100	9.000	7.700	1.650
101630	**8**	**80**	**280**	32211/32213	**M20**	220	275	8.000	9.000	7.400	7.200	8.100	6.700	1.750
101640	**8**	**90**	**320**	32211/32215	**M20**	220	275	9.000	10.000	8.500	8.100	9.000	7.700	1.750

101700

Ayarlanabilir Dingil
Adjustable Axle

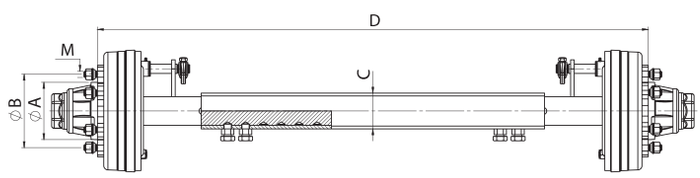

Order Number Sipariş No	Profile C (mm) Profil C (mm)	Brake Fren	Bearing Rulman	Capacity / Kapasite 25 km/h	Capacity / Kapasite 40 km/h	Bolt Bijon	Centre Hole-A Jant Göbeği-A	Bolt Center-B Bijon Merkezi-B
102100	**70x6**	-	32207/32209	3.000	2.700	**5xM16**	110	160
101166	**70x6**	260x50	32207/32209	3.000	2.700	**5xM16**	110	160
102146	**80x8**	-	32208/32210	5.000	4.500	**6xM18**	160	205
101088	**80x8**	300x60	32208/32210	5.000	4.500	**6xM18**	160	205
102218	**100x10**	-	32211/32213	7.800	7.100	**6xM18**	160	205
101197	**100x10**	300x60	32211/32213	7.800	7.100	**6xM18**	160	205
102218-1	**100x10**	-	32211/32213	8.500	7.600	**8xM20**	220	275
101198	**100x10**	300x60	32211/32213	8.500	7.600	**8xM20**	220	275

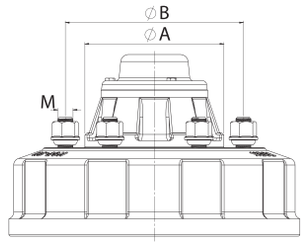

105000
Kampana / *Drum Brake*

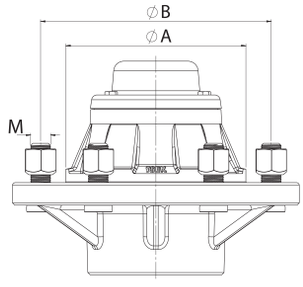

106000
Porya / *Hub*

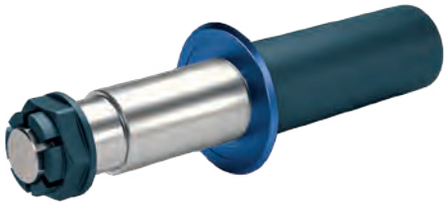

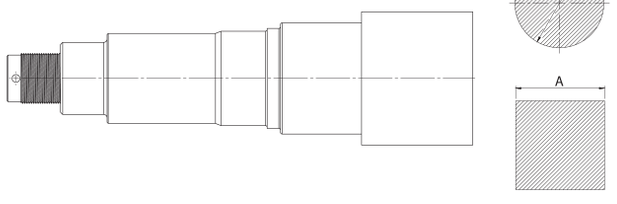

107000
Akis (Somunlu-Keçeli)
Axis (With Nut-Seal)

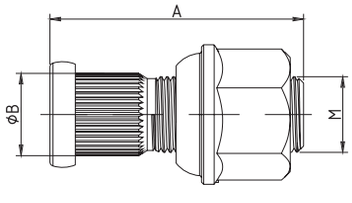

141000
Bijon / *Bolt*

Order Number **Sipariş No**	Thread (M) **Yiv Ölçüsü (M)**	Length-A (mm) **Boy-A (mm)**	Knurl Surface -B (mm) **Tırtır Üstü - B (mm)**
141005	M12x1,5	40	**Tofaş Bijonu Somunsuz** Without Nut
141020	M16x1,5	55	17,5
141030	M18x1,5	60	19,5
141040	M18x1,5	70	19,5
141045	M18x1,5	80	19,5
141050	M20x1,5	70	21,5
141055	M20x1,5	85	21,5
141060	M22x1,5	80	23,5
141065	M22x1,5	100	23,5

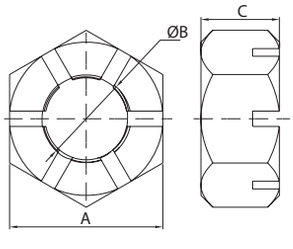

142000
Dingil Somunu / *Axis Nut*

Order Number **Sipariş No**	Outer Dia.-A (mm) **Dış Çap-A (mm)**	Height-C (mm) **Yükseklik-C (mm)**	Thread Size (mm) **Yiv Ölçüsü (mm)**
142009	24	24	5/8"
142010	36	24	1"
142031	50	30	M 33x2
142051	60	32	M 39x2
142061	70	40	M 46x2
142070	85	40	M 58x2

107400

Hidrolik Fren Lifti - Krom
Hydraulic Brake Cylinder - Chrome

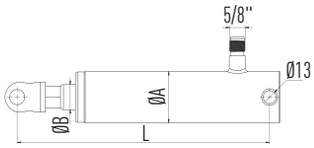

Order Number **Sipariş No**	Product Type **Ürün Cinsi**	Closed Lenght (L) **Kapalı Boy (L)**	Tube Dia. (mm) ØA **Boru Çapı (mm) ØA**	Rod Dia. (mm) ØB **Mil Çapı (mm) ØB**	Stroke (mm) **Strok (mm)**
107410	**Büyük** / Big	260	50	25	70
107420	**Küçük** / Small	250	45	20	80

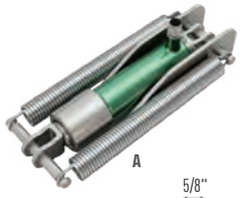

A

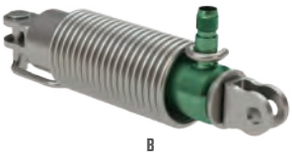

B

C

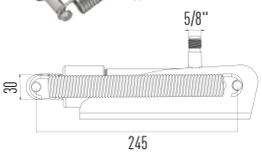

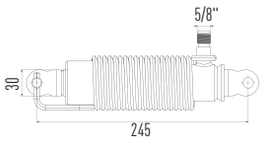

Order Number **Sipariş No**	Product Type **Ürün Cinsi**	Model **Model**
107430	**Dıştan Çift Yaylı - Set** / With Double Spring	A
107435	**Dıştan Tek Yaylı - Set** / With Single Spring	B
107450	**Bağlantı Aparatı** / Connection Kit	C

107500

Hava Fren Körüğü
Brake Diaphragm

Order Number **Sipariş No**	Type **Tip**
107511	16
107521	20
107531	24
107541	30

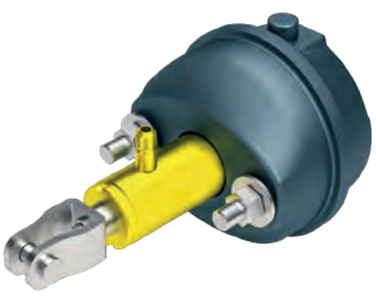

107500

Hidrolik Fren Lifti+ Hava Fren Körüğü
Hydraulic Brake Cylinder+Brake Diaphragm

Order Number **Sipariş No**	Type **Tip**
107529	16
107532	24

107570

İmdatlı Hava Fren Körüğü
Spring Brake Diaphragm

Order Number **Sipariş No**	Type **Tip**
107575	16/24
107580	24/30
107585	30/30

107600

Frezeli Küçük Fren Kolu ve Merkezi - Ø 22

Milled Brake Lever and Center Arm /Small - Ø 22

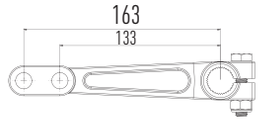

Order Number **Sipariş No**	Type **Tip**
107610	**Fren Kolu ve Merkezi (a+a+b)** Brake Lever and Center
107620	**Fren Kolu (a)** / Brake Lever
107630	**Fren Merkezi (b)** / Brake Center

107700

Frezeli Orta Fren Kolu ve Merkezi - Ø 26

Milled Brake Lever and Center Arm /Middle - Ø 26

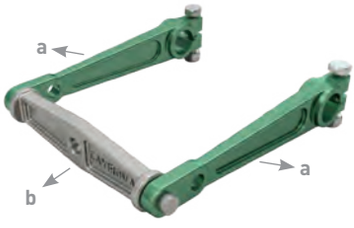

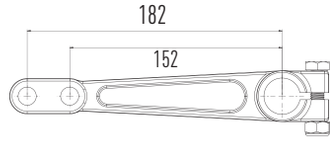

Order Number **Sipariş No**	Type **Tip**
107710	**Fren Kolu ve Merkezi (a+a+b)** Brake Lever and Center
107720	**Fren Kolu (a)** / Brake Lever
107730	**Fren Merkezi (b)** / Brake Center

107740

Frezeli Büyük Fren Kolu ve Merkezi - Ø 32

Milled Brake Lever and Center Arm /Big - Ø 32

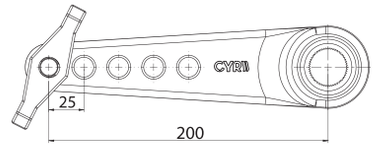

Order Number **Sipariş No**	Type **Tip**
107740	**Fren Kolu ve Merkezi (a+a+b)** Brake Lever and Center
107741	**Fren Kolu (a)** / Brake Lever
107742	**Fren Merkezi (b)** / Brake Center

101939

Frezeli Fren Mili - 2 Adet

Milled Brake Shaft - 2 Pieces

Order Number **Sipariş No**	Type **Tip**
101940	**Küçük Fren** / Small Brake T Ø 22
101941	**Orta Fren** / Middle Brake T Ø 26
101942	**Büyük Fren** / Big Brake T Ø 32
101943	**Büyük Fren** / Big Brake T Ø 42

107800

Büyük Fren Cırcırı

Big Slack Adjuster

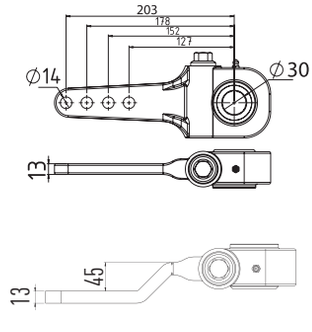

Order Number **Sipariş No**	Type **Tip**
107846	**Fren Cırcırı-Frezeli-İnce Diş** Slack Adjuster-Splined-Small Teeth
107851	**Fren Cırcırı-Frezeli-Kalın Diş** Slack Adjuster-Splined-Big Teeth
107857	**Fren Cırcırı-Frezeli-Eğik-İnce Diş** Slack Adjuster-Splined-Bended-Small Teeth

Güç ve Kontrol Elinizde!

YÜK-HIZ-KM Ölçümünde Sensör Teknolojisi...

SİSTEM: DİNGİL YÜKLERİNİN VE RÖMORKUN KİLOMETRESİNİN ÖLÇÜMÜ

• CYR dingilleri için özel olarak geliştirilen sensörler, yüksek güvenilirlik ve ölçüm doğruluğunu sağlar.

Özellikler:

Yük Sensörü:
Dingil gövdesine entegre edilmiş sensörleri kullanan tartım sistemi.

Faydalar:
• Anlık ve dinamik olarak toplam ağırlık ölçümü.
• Toplam ağırlık ve taşıma kapasitesinin izlenmesiyle işletme maliyetlerinin optimizasyonunun sağlanması.

Hız Sensörü:
Dingile monte edilen sensör ile yapılan km. takibi.

Faydalar:
• Araç sahibi veya ilgili sürücü, çalışma saatlerini veya kilometreyi görüntüleyebilir.
• Yapılan toplam km. veya günlük km. takibi.

SYSTEM: MEASUREMENT OF AXLE LOAD AND TRAILER MILEAGE

• Sensors which specially developed for CYR axles ensure high reliability and measurement accuracy.

Features:

Load Sensor:
Load/weight measurement system using an integrated sensor on axle body.

Advantages:
• Instant and dynamic total weight measurement.
• Optimization of operating costs with monitoring of total weight and payload.

Speed Sensor:
Tracking of mileage with the sensor mounted on the axle.

Advantages:
• Vehicle operator can view hours of operation or mileage.
• Tracking of total kilometers traveled or kilometers per day.

108600

Parabolik Makas - Burçlu

Parabolic Leaf Spring - With Bush

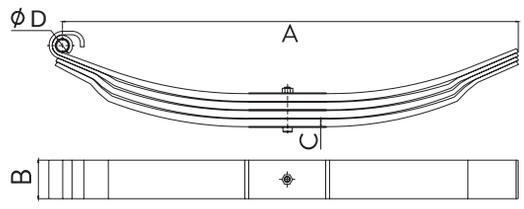

Order Number **Sipariş No**	Leaf Pcs. **Kat Sayısı**	Sheet Size - B/C (mm) **Lama Ölçüsü - B/C (mm)**	Length-A (mm) **Boy-A (mm)**	Bush Diam.-D (mm) **Burç Çapı-D (mm)**	Capacity (kg) **Kapasite (kg)**
108689	**3**	70/18	950	25	**3.000**
108691	**4**	70/18	950	25	**4.000**
108670	**2**	80/20	770	30	**2.500**
108666	**3**	80/20	770	30	**4.000**
108679	**3**	80/20	955	30	**4.000**
108671	**2**	80/22	950	30	**3.000**
108690	**2**	80/25	955	30	**3.500**
108686	**3**	80/25	955	30	**5.000**
108660	**4**	100/20	1.175	30	**6.000**
108687	**3**	100/23	950	30	**6.000**
108662	**3**	100/28	1.175	30	**7.000**
108665	**2**	100/30	1.048	30	**5.000**

108600

Parabolik Makas - Burçsuz

Parabolic Leaf Spring - Without Bush

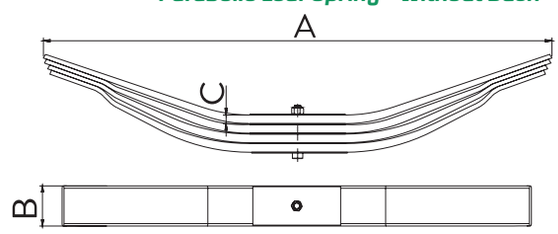

Order Number **Sipariş No**	Leaf Pcs. **Kat Sayısı**	Sheet Size - B/C (mm) **Lama Ölçüsü - B/C (mm)**	Length-A (mm) **Boy-A (mm)**	Capacity (kg) **Kapasite (kg)**
108680	**3**	76/26	1.000	**6.000**
108688	**3**	76/25	1.175	**5.000**
108675	**4**	100/20	1.175	**6.000**
108661	**4**	100/25	1.175	**7.500**
108681	**3**	100/28	1.185	**7.000**

Parabolik Makasın Avantajları

1. Parabolik yay düzeneği, konvansiyonel yay düzeneğine kıyasla daha az yaprak içerir, ancak eşit yük taşıyabilir.
2. Parabolik yaylar uzun sürücüler için uygundur, daha iyi sürüş konforu ve sürücünün kontrolünü sağlar.
3. Parabolik düzeneğin her yaprağı ayrı bir yay görevi görür.
4. Parabolik yay düzeneğinde tüm yapraklar, geleneksel yaprak yay düzeneğindeki gibi eşit yük taşıyan tam uzunluktadır.
5. Parabolik yapraklar arasında, yapraklar arasındaki sürtünmeyi azaltan ve daha iyi sürüş konforu sağlayan bir boşluk vardır.
6. Parabolik düzeneğin ağırlığı, konvansiyonel yaylı düzeneğe göre% 30 daha azdır, sırayla aracın taşıma yükü artar.
7. Parabolik yayda, göz kalınlığı, tarlalardaki göz arızalarını azaltan geleneksel yay ile karşılaştırıldığında arttırılır.
8. Merkezi montajda durumdaki olmayan yapraklar arasında sürtünme, su ve çamur tıkanmasını önlemek için parabolik montajda merkez çizgiler kullanılır.
9. Yorulma ömrünü arttırmak için, parabolik yaylar, sıkılan vurulmuş geleneksel yaylara kıyasla kontrollü bir şekilde sıkıştırılmış vurularak çekilir.
10. Parabolik yaylarda konvansiyonel yaylardaki siyah oksit kaplamaya kıyasla daha iyi yüzey koruması için Henkel kaplama yapılır.
11. Bir parabolik yardımcı yaprak ilavesi ile parabolik yay düzeneği durumunda yükleme taşıma kapasitesi, yaprak geleneksel yayların üç yaprağı ilavesine eşittir.

Advantages of Parabolic Leaf Spring

1.Parabolic spring assembly contains less number of leaves as compared to Conventioal spring assembly but can carry equal load.
2.Parabolic springs are suited for long drives,provide better ride comfort and control to the driver.
3.Each leaf of parabolic assembly acts as a separate spring.
4.In parabolic spring assembly all leaves are of full length carrying equal load as in conventional leaf spring assembly.
5.There is a gap between parabolic leaves, which reduces the friction between the leaves and provides better ride comfort.
6.The weight of parabolic assembly is lesser by 30% than the conventional spring assembly, in turn the pay load of the vehicle increases.
7.In parabolic spring the eye thickness is increased as compared to conventional spring, which reduces the eye failures in the fields.
8.Centre lines are used in parabolic assembly to avoid friction, water and mud blockage between the leaves which is not the case in conventional assembly.
9.In order to improve fatigue life, parabolic springs are stress shot peened in controlled manner in comparison to conventional springs which are shot peened.
10.Henkel coating for better surface protection is done in parabolic springs compared to black oxide coat in conventional springs.
11.Load carrying capacity in case of parabolic spring assembly with addition of one parabolic aux leaf is leaf is equal to the addition of three leaves of conventional springs.

119000

Hafif Tonaj Römork Makası
Low Tonnage Leaf Spring

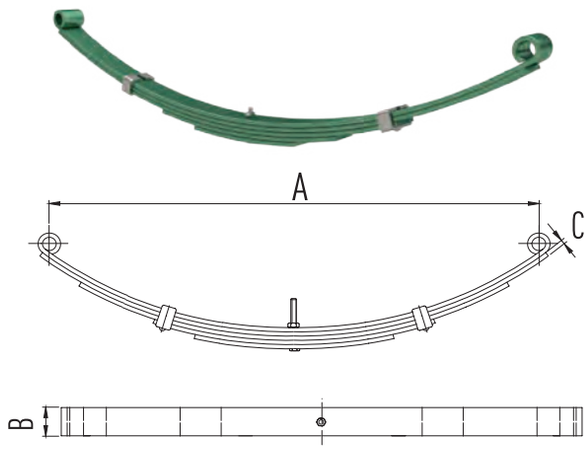

Order Number **Sipariş No**	Leaf Piece **Kat Sayısı**	Sheet Size - B/C **Lama Ölçüsü - B/C**	Length-A (mm) **Boy-A (mm)**	Capacity Kg **Kapasite Kg**
119010	**4**	45/7	500	**350**
119015	**5**	45/7	500	**375**
119020	**5**	45/7	880	**400**
119030	**6**	45/7	880	**450**
119040	**7**	45/7	880	**600**
119050	**9**	45/7	880	**800**
119060	**3**	57/8	800	**600**
119070	**4**	57/8	800	**700**
119080	**5**	57/8	800	**850**

119200

Tandem Römork Makası
Tandem Leaf Spring

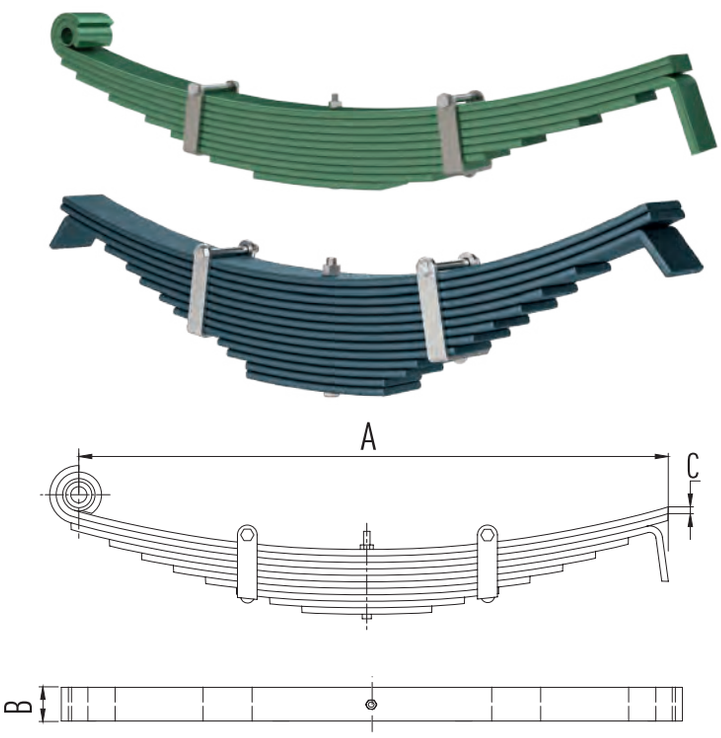

Order Number **Sipariş No**	Type **Tip**	Leaf Piece **Kat Sayısı**	Sheet Size - B/C **Lama Ölçüsü - B/C**	Length-A (mm) **Boy-A (mm)**	Capacity Kg **Kapasite Kg**
119201	**Burçlu** With Bush	10	70/10	910	**4.000**
119211	**Burçsuz** Without Bush	10	70/10	910	**4.000**
119225	**Burçlu** With Bush	13	70/10	850	**4.500**
119226	**Burçsuz** Without Bush	13	70/10	850	**4.500**

119400

Muavin Makas
Additional Leaf Spring

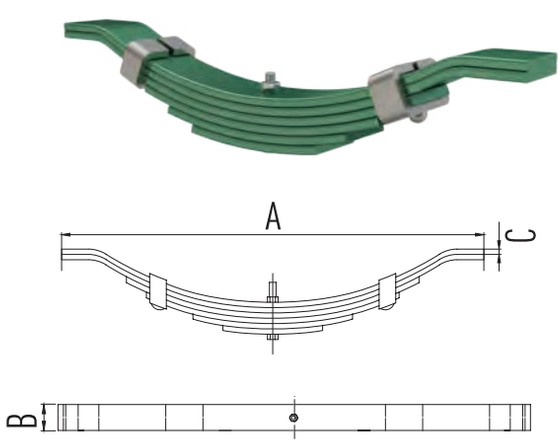

Order Number **Sipariş No**	Leaf Piece **Kat Sayısı**	Sheet Size - B/C **Lama Ölçüsü - B/C**	Length-A (mm) **Boy-A (mm)**	Capacity Kg **Kapasite Kg**
119401	**6**	57/8	640	**500**
119411	**6**	57/8	720	**600**
119421	**6**	63/8	720	**750**
119431	**6**	70/10	720	**950**

120000

Römork Makası Düz

Leaf Spring Standard

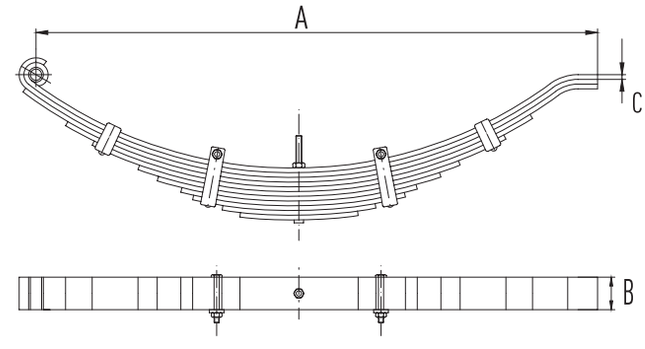

Order Number **Sipariş No**	Leaf Pcs. **Kat Sayısı**	Sheet Size - B/C (mm) **Lama Ölçüsü - B/C (mm)**	Length-A (mm) **Boy-A (mm)**	Bush Diam.-D (mm) **Burç Çapı-D (mm)**	Capacity (kg) **Kapasite (kg)**
120004	**3**	57/8	750	19	**525**
120005	**5**	57/8	945	19	**800**
120006	**5**	57/8	750	19	**750**
120010	**6**	57/8	945	19	**850**
120020	**7-2**	57/8	945	19	**950**
120030	**7-3**	57/8	945	19	**1.050**
120040	**8**	57/8	945	19	**1.200**
120041	**9**	57/8	945	19	**1.300**
120050	**10**	57/8	945	19	**1.450**
120060	**11**	57/8	945	19	**1.600**
120070	**12**	57/8	945	19	**1.700**
120080	**13**	57/8	945	19	**1.800**
120090	**14**	57/8	945	19	**2.000**
120100	**15**	57/8	945	19	**2.150**
120110	**12**	57/8	1.110	25	**1.850**
120118	**10**	70/10	1.050	25	**2.750**
120120	**12**	70/10	1.050	25	**3.250**
120125	**12**	70/10	1.100	25	**3.000**
120130	**Çift Burçlu** *Double Bush* **10**	76/10	880	25	**3.250**
119241	**Burçlu** *With Bush* **8**	80/10	785	30	**3.000**
119242	**Burçlu** *With Bush* **12**	80/10	970	30	**5.000**

121000

Römork Makası Muavinli
Leaf Spring With Addition

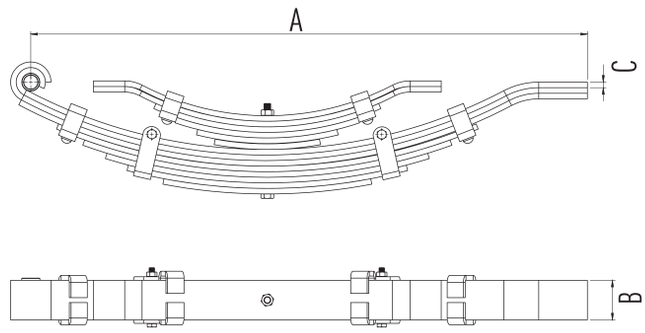

Order Number **Sipariş No**	Leaf Pcs. **Kat Sayısı**	Sheet Size - B/C (mm) **Lama Ölçüsü - B/C (mm)**	Length-A (mm) **Boy-A (mm)**	Bush Diam.-D (mm) **Burç Çapı-D (mm)**	Capacity (kg) **Kapasite (kg)**
121010	**8+7**	57/8	945	19	**1.600**
121015	**9+7**	57/8	945	19	**1.700**
121020	**10+7**	57/8	945	19	**1.800**
121030	Çift Burçlu *Double Bush* **10+7**	57/8	945	19	**1.800**
121040	**11+7**	57/8	945	19	**1.950**
121050	**12+7**	57/8	945	19	**2.100**
121060	**13+7**	57/8	945	19	**2.250**
121070	**14+7**	57/8	945	19	**2.500**
121080	**12+7**	57/8	1.110	25	**2.500**
121100	**12+7**	63/8	1.050	25	**2.350**
121110	**12+7**	63/8	1.110	25	**2.750**
121111	Dört Basar **12+7**	63/8	1.110	25	**3.250**
121120	**12+7**	63/8	1.190	25	**3.000**
121121	Dört Basar **12+7**	63/8	1.190	25	**3.500**
121130	**10+5**	70/10	1.110	25	**3.000**
121131	Dört Basar **10+5**	70/10	1.110	25	**3.000**
121135	**12+5**	70/10	1.110	25	**3.500**
121133	Dört Basar **11+7**	70/10	1.310	25	**4.000**
121136	**10+5**	70/10	1.190	25	**4.500**
121137	Dört Basar **12+5**	70/10	1.190	25	**4.000**
121138	**10+5**	70/10	1.310	25	**4.000**
121140	**12+6**	70/10	1.310	25	**5.000**
121160	**14+7**	76/10	1.170	25	**4.000**

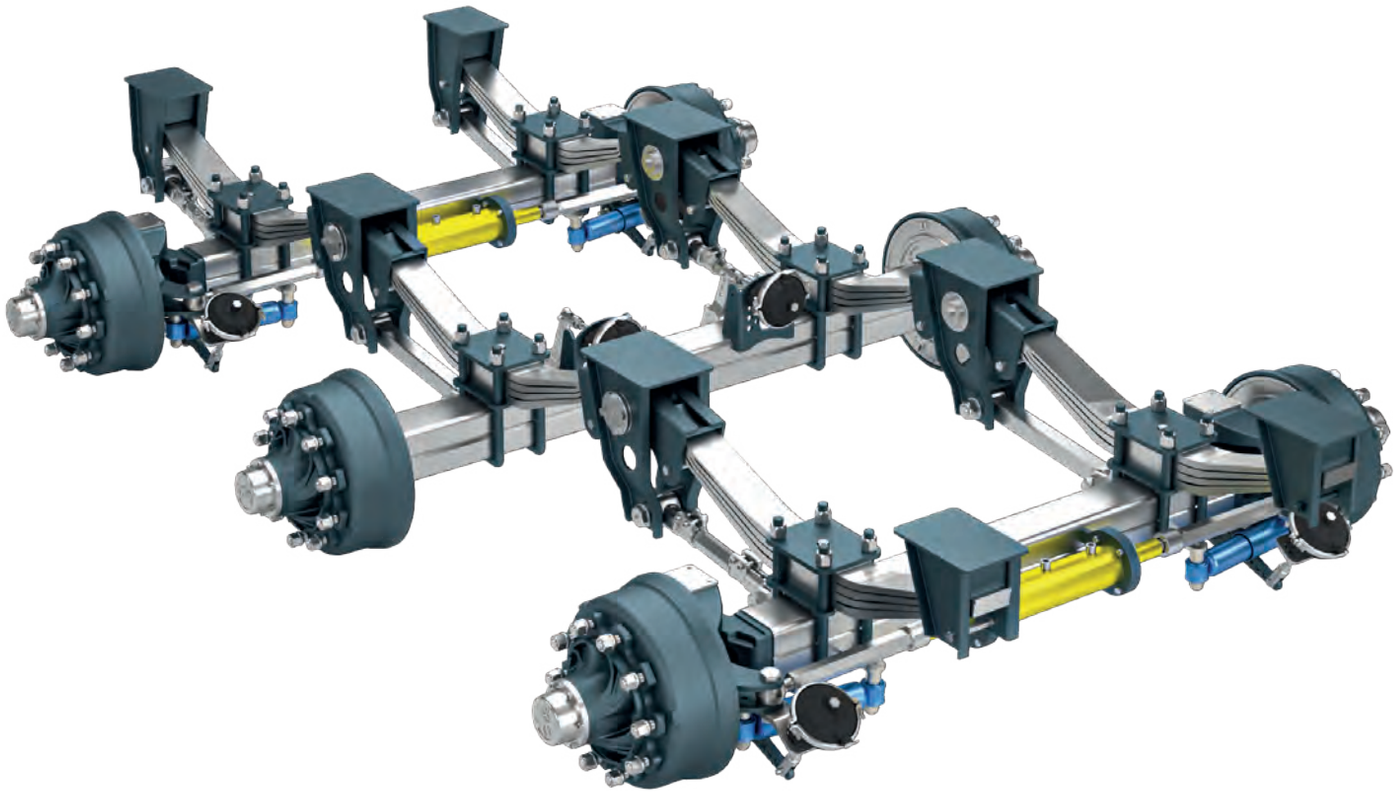

PARABOLİK ve ÇOK KATLI MAKAS SÜSPANSİYON GRUBU

Tarım römorku üreticileri ve kullanıcıların tüm ihtiyaçlarını karşılayan mekanik süspansiyon grubu, her türlü tonaj ve ölçüye cevap verecek şekilde üretilmektedir. Yüksek kalitedeki set parçaları dayanıklı ve kolay montaj avantajıyla uzun ömürlü kullanım için idealdir. Süspansiyon takımı tüm parçaları ile beraber set halinde teslim edilmektedir. İstenirse opsiyonel olarak dingiller ile beraber montajlı olarakta verilebilir. (Mono, Tandem, Tridem)

Süspansiyon setinde olan parçalar:
- Ayarlı ve sabit bubi kolları, vidaları ve destekleri ile beraber.
- Makas bağlantı plakaları, U bağlantılar ve somunları ile beraber.
- Sac süspansiyon parçaları ve pernolar.

Montajda dikkat edilmesi gerekenler:
- Dingillerin sıralaması ve yönü doğru yapılmalı, merkezden uzaklığı eşit olmalıdır.
- Süspansiyonun yönü montaj resimlerinde belirtilen şekilde olmalıdır.
- Kaynak operasyonları dikkatli ve yeterli uygunlukta yapılmalı.
- Süspansiyondaki bütün sıkma ve ayarlar römork üzerinde yapılmalıdır.

Arazi şartları, fazla dengesiz yüklemeler, aşırı orandaki frenlemeler gibi nedenlerden dolayı oluşabilecek burkulma ve zorlamalar montajın doğru yapılmasını gerekli kılar. Montajdaki hatalar lastiklerin ve balataların çabuk aşınmasına yol açabilir. Araç üreticisi montajdaki hatalardan doğabilecek zararlardan daima sorumludur.

PARABOLIC AND MULTI SHEET SPRING SYSTEMS

The mechanical suspension group, which meets all the needs of agricultural trailer manufacturers and users, is produced to respond to all kinds of tonnage and measurement. The high-quality set pieces are ideal for long-life use due to their durability and easy mounting. The suspension kit is delivered as a set with all the parts. Optionally, it can also be installed as an assembly with axles. (Mono, Tandem, Tridem)

Parts in suspension set:

-Attent with fixed and tapered arms, screws and supports.

-Connection plates, U-connections and nuts.

-Sheet suspension pieces and pins.

Things to watch out for during installation:

-The alignment of the wheels and the direction should be done correctly,the distance from the center should be equal.

- The direction of suspension should be as specified in the assembly drawings.

- Welding operations must be done with caution and adequacy.

- All tightening and adjustment of the suspension must be done on the trailer.

It is essential that the installation of the suspension system is done properly due to forcing and bending that might happen with overload, unbalanced load, excessive braking and land conditions. Faults in the assembly can lead to premature wear of tires and brakes. The vehicle manufacturer is always responsible for damages caused by faults in installation.

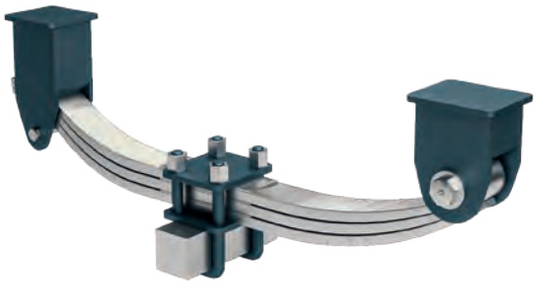

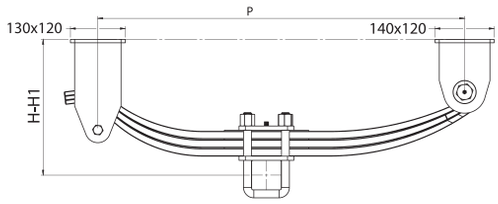

108230

Mono Makas Sistemi / Adet

Mono Leaf Spring System / Piece

Makas / *Spring 70 mm*

Order Number	Type	P (mm)	70		80		90		Capacity (kg)
Sipariş No	Makas Tipi		H (mm)	H1 (mm)	H (mm)	H1 (mm)	H (mm)	H1 (mm)	Kapasite (kg)
108240	3 Kat/Leaf 70x18x950	870	325	295	330	300	335	305	3.000
108252	4 Kat/Leaf 70x18x950	870	350	315	355	320	360	325	5.000

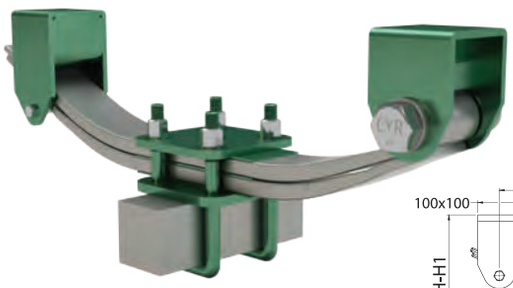

108230

Mono Makas Sistemi / Adet

Mono Leaf Spring System / Piece

Makas / *Spring 80 mm*

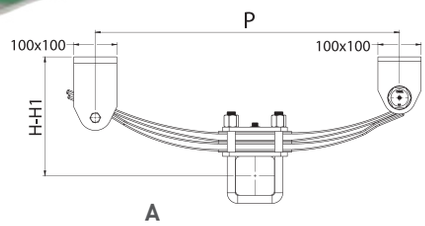

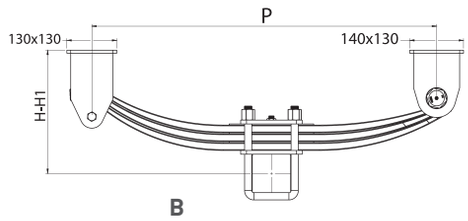

Order Number	Type	P (mm)	70		80		90		Capacity (kg)	Model
Sipariş No	Makas Tipi		H (mm)	H1 (mm)	H (mm)	H1 (mm)	H (mm)	H1 (mm)	Kapasite (kg)	Model
108234	2 Kat/Leaf 80x20x778	705	265	245	270	250	275	255	2.500	A
108237	2 Kat/Leaf 80x25x965	900	285	257	290	262	295	267	3.500	A
108235	2 Kat/Leaf 80x22x950	890	270	225	275	230	280	235	3.000	A
108236	8 Kat/Leaf 80x10x785	730	265	240	270	245	275	250	2.500	A
108237-1	3 Kat/Leaf 80x20x955	900	305	263	310	268	315	273	4.000	B
108237-2	3 Kat/Leaf 80x25x955	900	320	280	325	285	330	290	5.000	B

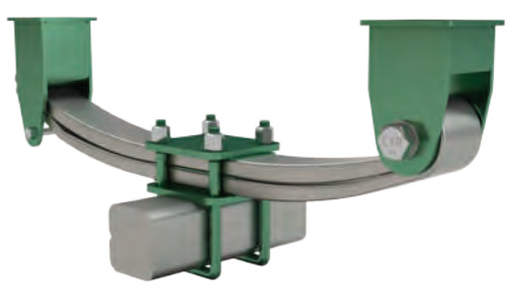

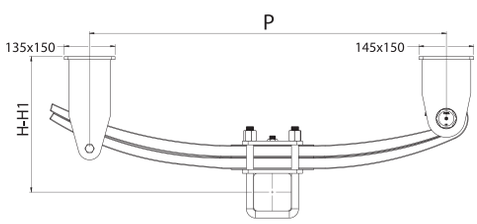

108230

Mono Makas Sistemi / Adet

Mono Leaf Spring System / Piece

Makas / *Spring 100 mm*

Order Number	Type	P (mm)	80		90		100		Capacity (kg)
Sipariş No	Makas Tipi		H (mm)	H1 (mm)	H (mm)	H1 (mm)	H (mm)	H1 (mm)	Kapasite (kg)
108238	2 Kat/Leaf 100x30x1055	950	350	313	355	318	360	323	5.000
108238-1	3 Kat/Leaf 100x23x950	920	407	382	412	387	417	392	5.500
108245	4 Kat/Leaf 100x20x1170	1.100	430	365	435	370	440	375	6.000

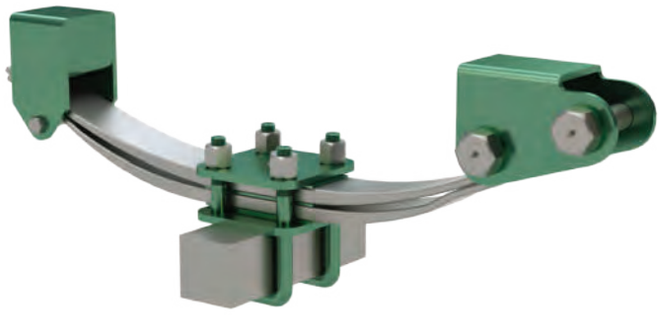

108240

Mono Makas Sistemi Ön Kulaklı / Adet

Mono Leaf Spring System With Front Bracket/ Piece

Makas / *Spring 80 mm*

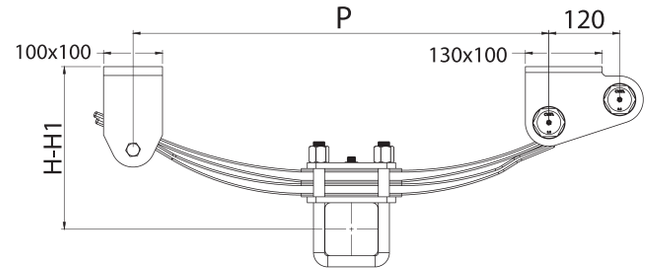

Order Number Sipariş No	Type Makas Tipi	P (mm)	70 H (mm)	70 H1 (mm)	80 H (mm)	80 H1 (mm)	90 H (mm)	90 H1 (mm)	Capacity (kg) Kapasite (kg)
108241	2 Kat/Leaf 80x20x778	705	265	245	270	250	275	255	2.500
108241-1	2 Kat/Leaf 80x22x950	890	270	225	275	230	280	235	3.000
108243	2 Kat/Leaf 80x25x965	900	285	257	290	262	295	267	3.500
108243 -1	3 Kat/Leaf 80x20x955	900	305	263	310	268	315	273	4.000
108243 - 2	3 Kat/Leaf 80x25x955	900	320	280	325	285	330	290	5.000
108242	8 Kat/Leaf 80x10x785	730	265	240	270	245	275	250	2.500

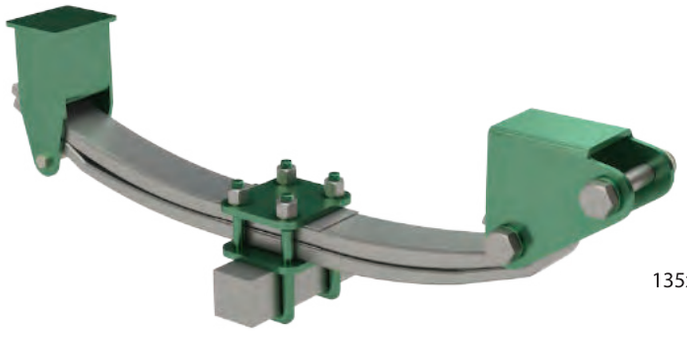

Makas / *Spring 100 mm*

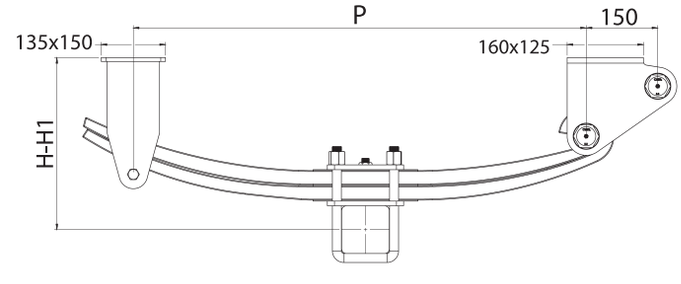

Order Number Sipariş No	Type Makas Tipi	P (mm)	80 H (mm)	80 H1 (mm)	90 H (mm)	90 H1 (mm)	100 H (mm)	100 H1 (mm)	Capacity (kg) Kapasite (kg)
108244	2 Kat/Leaf 100x30x1055	950	350	313	355	318	360	323	5.000
108244 -1	3 Kat/Leaf 100x23x1000	920	407	382	412	387	417	392	5.000
108244-2	4 Kat/Leaf 100x20x1170	1.100	430	365	435	370	440	375	6.000

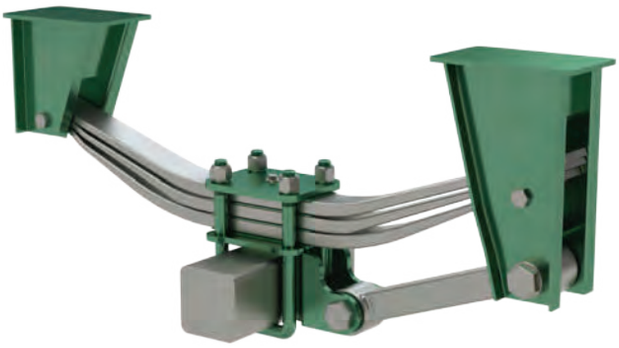

108245

Mono Makas Sistemi / Adet
Mono Leaf Spring System / Piece

Makas / *Spring 76 mm*

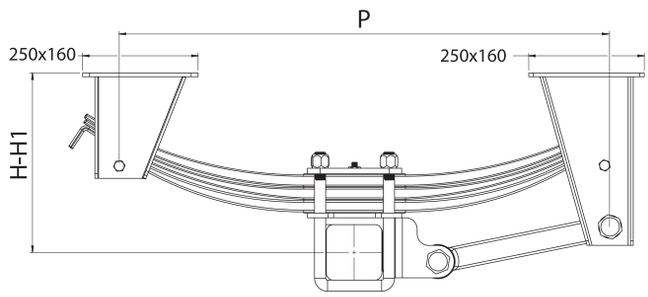

Order Number	Type	P (mm)	120		140		Capacity (kg)
Sipariş No	Makas Tipi		H (mm)	H1 (mm)	H (mm)	H1 (mm)	Kapasite (kg)
108248	3 Kat/Leaf 76x25x1170	1.050	395	355	405	365	5.000
108249	3 Kat/Leaf 76x26x1000	900	350	328	360	338	6.000

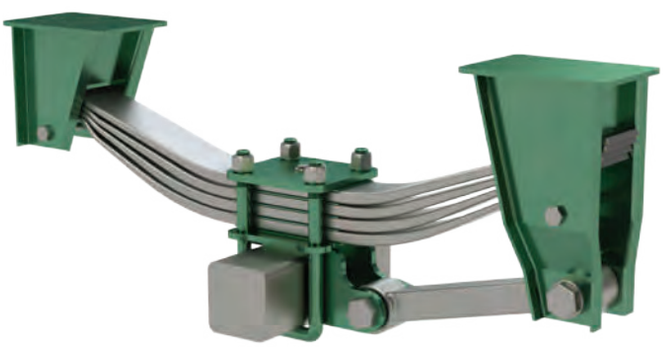

Makas / *Spring 100 mm*

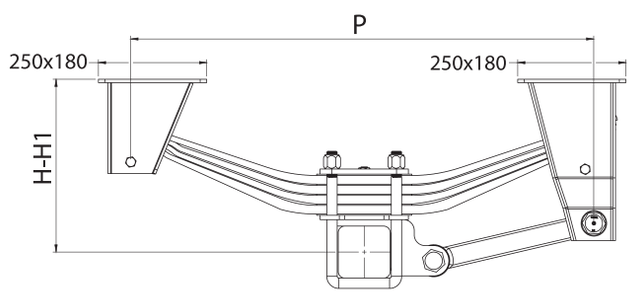

Order Number	Type	P (mm)	120		140		Capacity (kg)
Sipariş No	Makas Tipi		H (mm)	H1 (mm)	H (mm)	H1 (mm)	Kapasite (kg)
108246	4 Kat/Leaf 100x20x1170	1.050	400	335	410	345	6.000
108247	3 Kat/Leaf 100x28x1170	1.050	395	355	405	365	7.000
108247-1	4 Kat/Leaf 100x25x1170	1.050	400	335	410	345	7.500

108260

Tandem Makas Sistemi
Tandem Leaf Spring System

Makas / *Spring 80 mm*

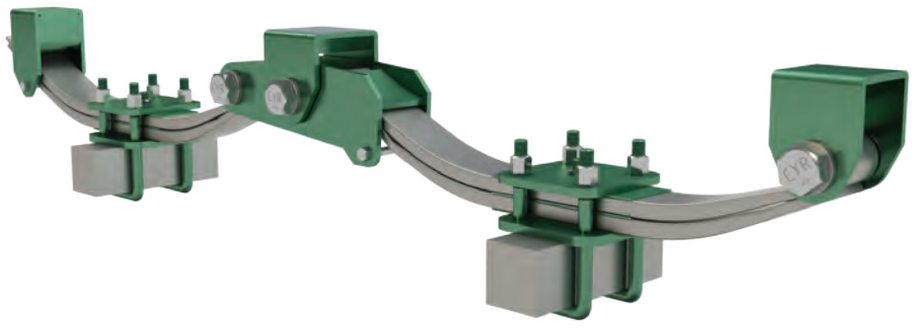

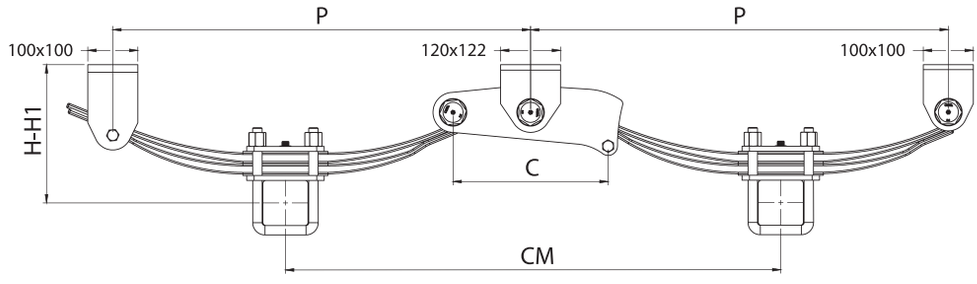

Order Number Sipariş No	Type Makas Tipi	CM (mm)	P (mm)	C (mm)	70 H (mm)	70 H1 (mm)	80 H (mm)	80 H1 (mm)	90 H (mm)	90 H1 (mm)	Capacity (kg) Kapasite (kg)
108261	**2 Kat/Leaf 80x20x778**	**990**	835	310	265	245	270	250	275	255	**10.000**
108262	**2 Kat/Leaf 80x22x950**	**1.080**	1.030	310	270	225	275	230	280	235	**12.000**
108263	**2 Kat/Leaf 80x25x965**	**1.200**	1.045	310	285	257	290	262	295	267	**14.000**

108305

Tandem Makas Sistemi
Tandem Multi Leaf Spring System

Makas / *Spring 80 mm*

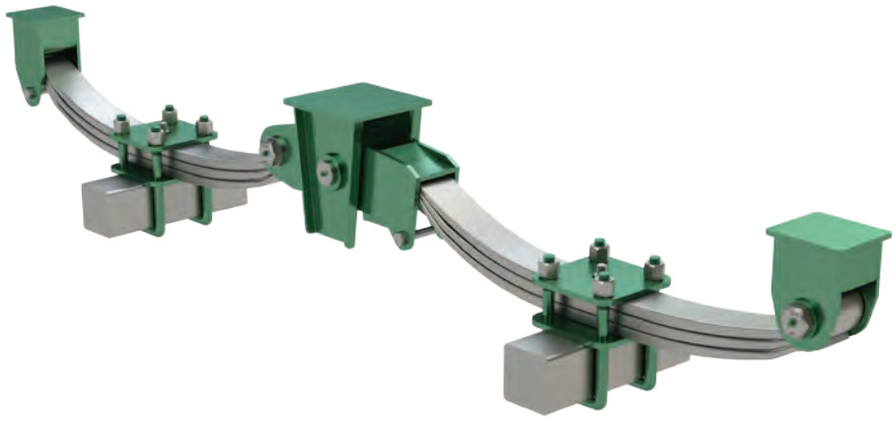

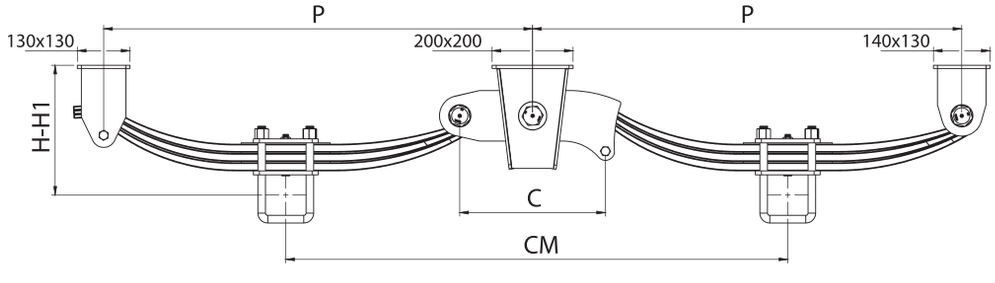

Order Number Sipariş No	Type Makas Tipi	CM (mm)	P (mm)	C (mm)	80 H (mm)	80 H1 (mm)	90 H (mm)	90 H1 (mm)	100 H (mm)	100 H1 (mm)	Capacity (kg) Kapasite (kg)
108305	**3 Kat/Leaf 80x20x955**	**1.240**	1.060	360	310	268	315	273	320	278	**15.000**
108305-1	**3Kat/Leaf 80x25x955**	**1.240**	1.060	360	325	285	330	290	335	295	**20.000**

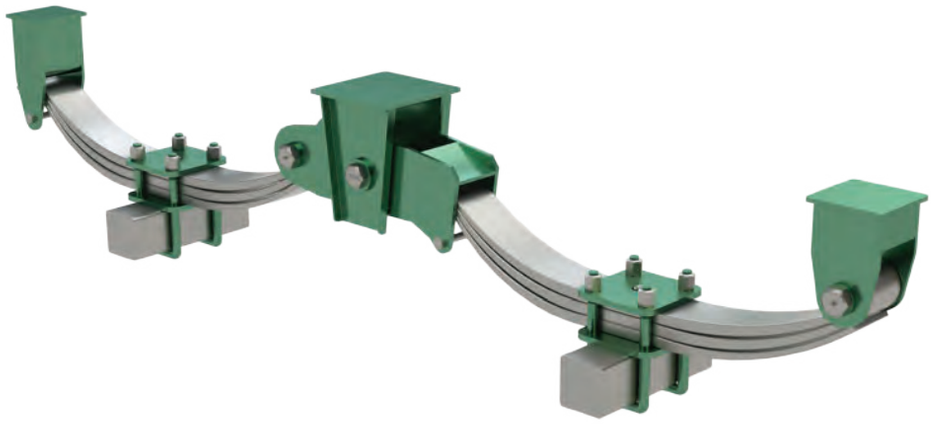

108310

Tandem Makas Sistemi - 20 Ton
Tandem Multi Leaf Spring System

Makas / *Spring 100 mm*

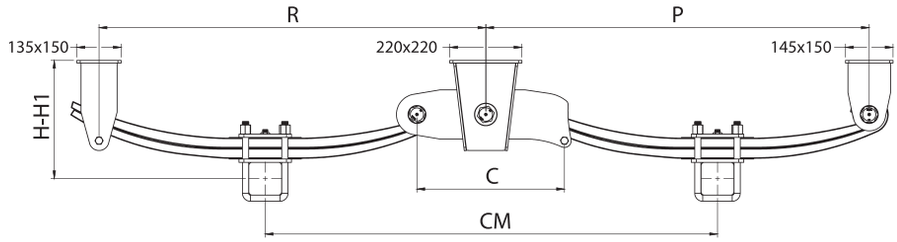

Order Number	Type	CM (mm)	P (mm)	R (mm)	C (mm)	80		90		100		Capacity (kg)
Sipariş No	**Makas Tipi**					**H (mm)**	**H1 (mm)**	**H (mm)**	**H1 (mm)**	**H (mm)**	**H1 (mm)**	**Kapasite (kg)**
108312	**2 Kat/Leaf 100x30x1055**	**1.380**	1.170	1.180	450	350	313	355	318	360	323	**20.000**
108313	**3 Kat/Leaf 100x23x950**	**1.330**	1.120	1.130	450	407	382	412	387	417	392	**22.000**
108318	**4 Kat/Leaf 100x20x1170**	**1.520**	1.310	1.320	450	430	365	435	370	440	375	**24.000**

108250

Tandem Makas Sistemi - 10 Ton
Tandem Leaf Spring System

Makas / *Spring 80 mm*

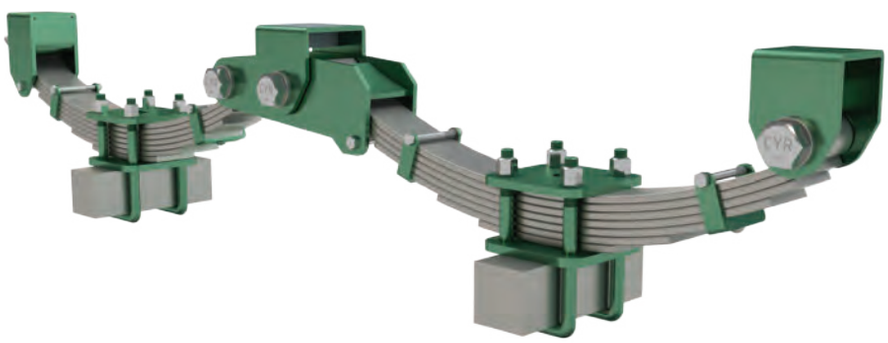

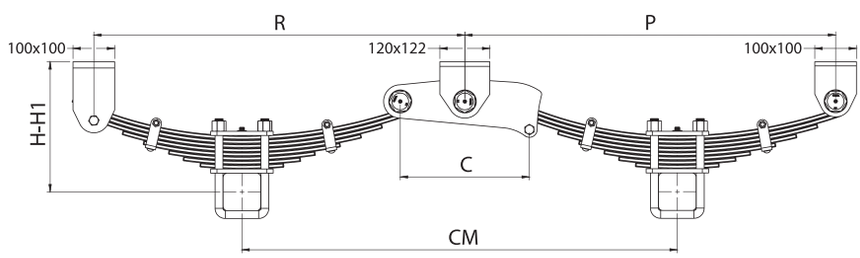

Order Number	Type	CM (mm)	P (mm)	R (mm)	C (mm)	70		80		90		Capacity (kg)
Sipariş No	**Makas Tipi**					**H (mm)**	**H1 (mm)**	**H (mm)**	**H1 (mm)**	**H (mm)**	**H1 (mm)**	**Kapasite (kg)**
108251	**8 Kat/Leaf 80x10x785**	**1.045**	890	890	310	265	240	270	245	275	250	**10.000**

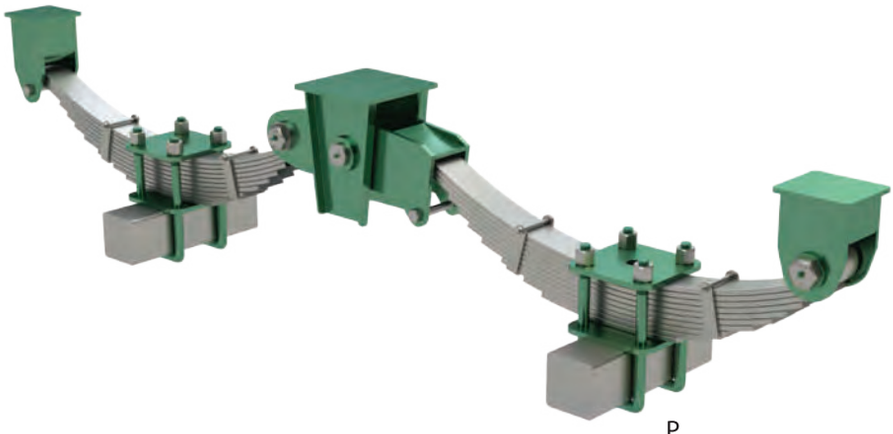

108305

Tandem Makas Sistemi
Tandem Multi Leaf Spring System

Makas / *Spring 70 mm*

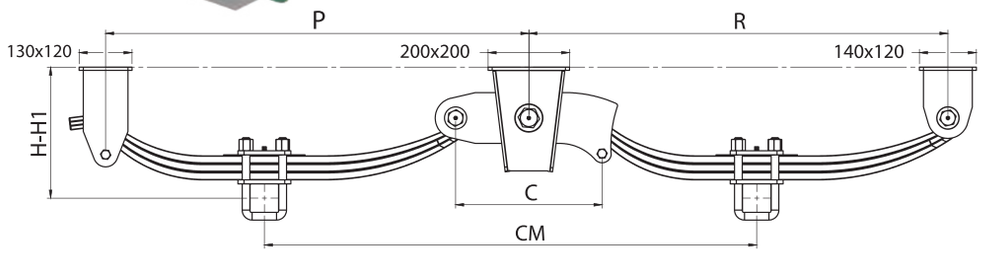

Order Number	Type					80		90		100		Capacity (kg)
Sipariş No	Makas Tipi	CM (mm)	P (mm)	R (mm)	C (mm)	H (mm)	H1 (mm)	H (mm)	H1 (mm)	H (mm)	H1 (mm)	Kapasite (kg)
108264	3 Kat/Leaf 70x18x950	1.210	1.040	1.030	360	330	300	335	305	340	310	14.000
108319	4 Kat/Leaf 70x18x950	1.210	1.040	1.030	360	355	320	360	325	365	330	20.000
108306	10 Kat/Leaf 70x10x910	1.220	1.040	1.040	360	365	305	370	310	375	315	15.000
108307	13 Kat/Leaf 70x10x850	1.160	980	980	360	390	345	395	350	400	355	16.000

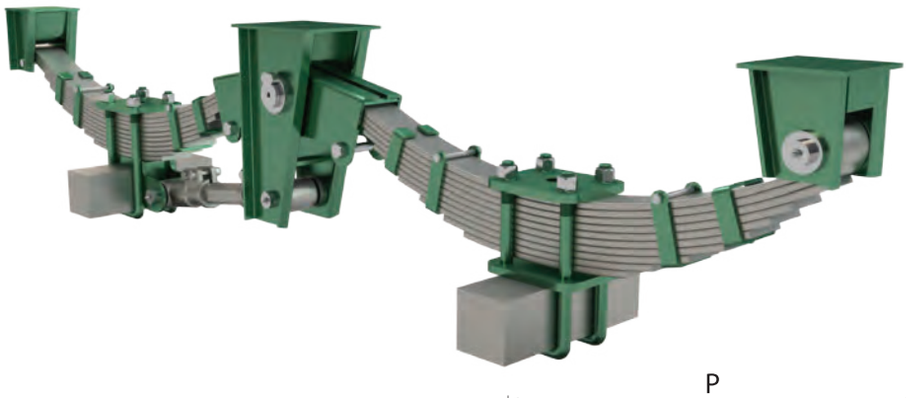

108300

Tandem Makas Sistemi
Tandem Leaf Spring System

Makas / *Spring 70 mm*

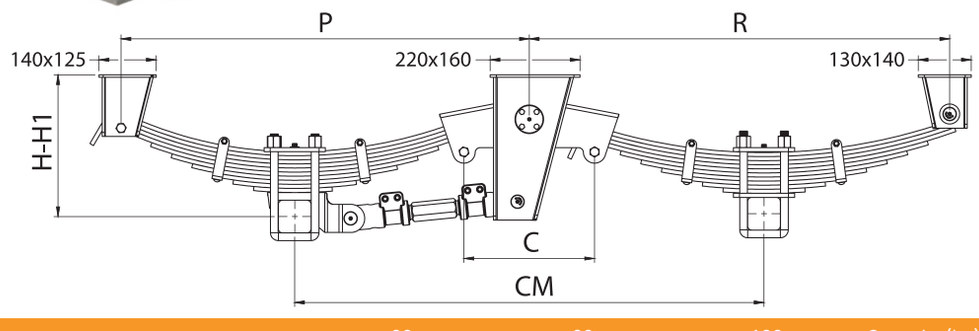

Order Number	Type					80		90		100		Capacity (kg)
Sipariş No	Makas Tipi	CM (mm)	P (mm)	R (mm)	C (mm)	H (mm)	H1 (mm)	H (mm)	H1 (mm)	H (mm)	H1 (mm)	Kapasite (kg)
108301	10 Kat/Leaf 70x10x910	1.150	1.000	1.030	320	355	295	360	300	365	305	15.000
108302	13 Kat/Leaf 70x10x850	1.090	940	970	320	380	335	385	340	390	345	16.000
108303	10 Kat/Leaf 70x10x910	1.150	1.000	1.030	320	355	295	360	300	365	305	15.000
108304	13 Kat/Leaf 70x10x850	1.090	940	970	320	380	335	385	340	390	345	16.000

Yandan Şaseli / *Connectable at Side*

108330

Tandem Makas Sistemi
Tandem Multi Leaf Spring System

Makas / *Spring 100 mm*

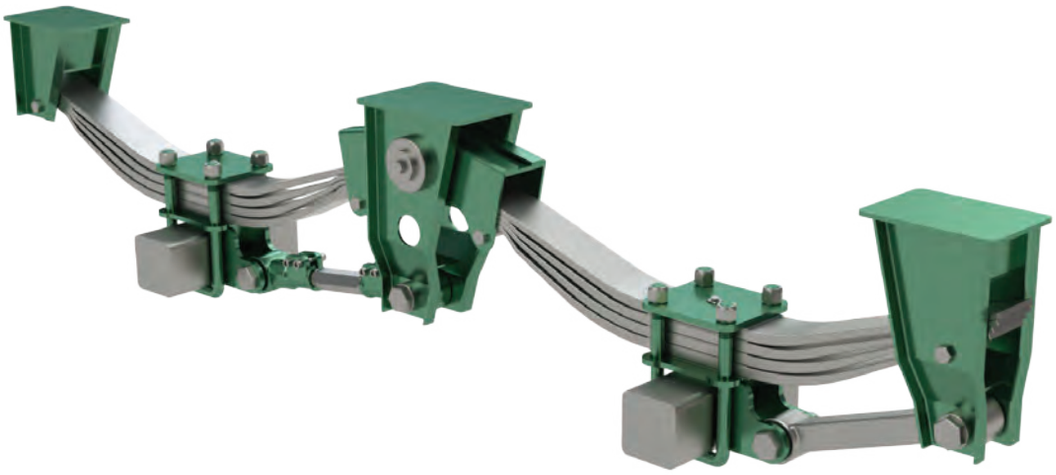

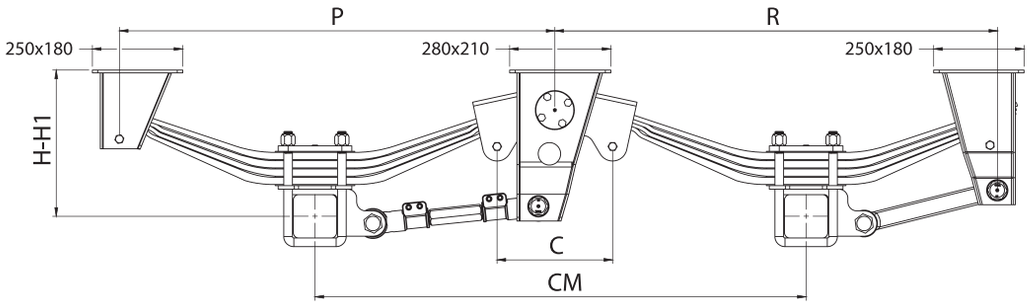

Order Number Sipariş No	Type Makas Tipi	CM (mm)	P (mm)	C (mm)	120 H (mm)	120 H1 (mm)	140 H (mm)	140 H1 (mm)	Capacity (kg) Kapasite (kg)
108332	**4 Kat/Leaf 100x20x1170**	**1.360**	1.205	320	400	335	410	345	**24.000**
108334	**4 Kat/Leaf 100x20x1170**	**1.525**	1.285	470	400	335	410	345	**24.000**
108336	**3 Kat/Leaf 100x28x1170**	**1.360**	1.205	320	400	350	410	360	**28.000**
108338	**3 Kat/Leaf 100x28x1170**	**1.525**	1.285	470	400	350	410	360	**28.000**
108316	**4 Kat/Leaf 100x25x1170**	**1.360**	1.205	320	400	365	410	375	**30.000**
108317	**4 Kat/Leaf 100x25x1170**	**1.525**	1.285	470	400	365	410	375	**30.000**

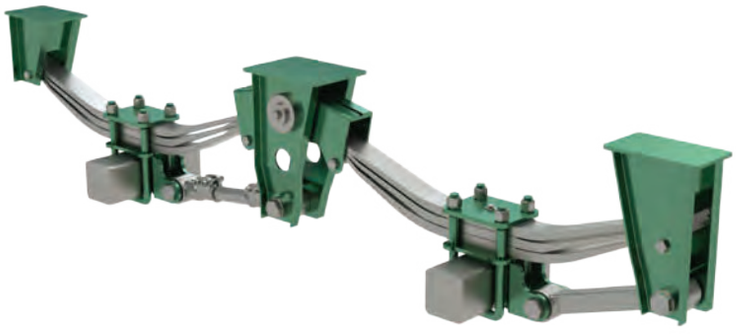

108320

Tandem Makas Sistemi

Tandem Leaf Spring System

Makas / *Spring 76 mm*

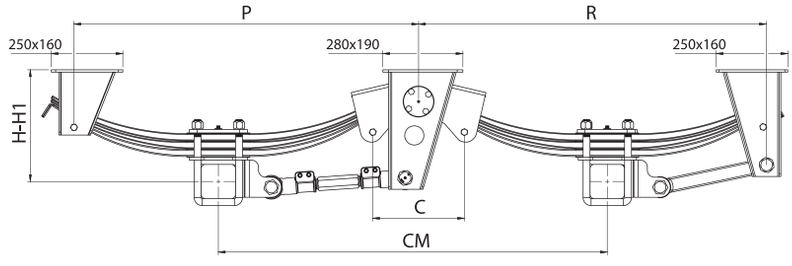

Order Number	Type	CM (mm)	P (mm)	C (mm)	120		140		Capacity (kg)
Sipariş No	Makas Tipi				H (mm)	H1 (mm)	H (mm)	H1 (mm)	Kapasite (kg)
108321	3 Kat/Leaf 76x25x1170	1.360	1.205	320	395	355	405	365	20.000
108322	3 Kat/Leaf 76x25x1170	1.525	1.285	470	395	355	405	365	20.000
108323	3 Kat/Leaf 76x25x1000	1.225	1.085	320	350	328	360	338	24.000
108324	3 Kat/Leaf 76x25x1000	1.375	1.160	470	350	328	360	338	24.000

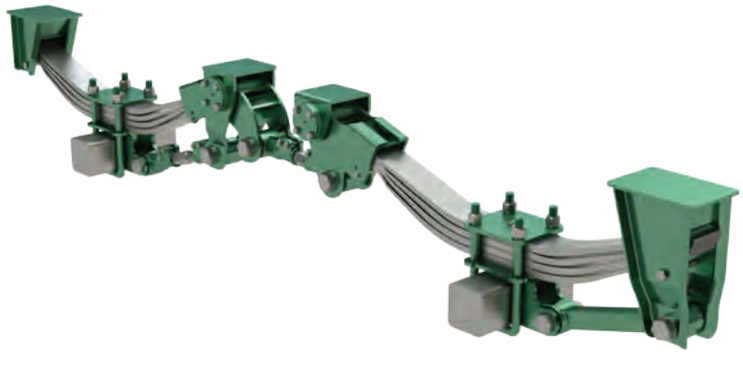

108335

Tandem Makas Sistemi

Tandem Multi Leaf Spring System

Makas / *Spring 100 mm*

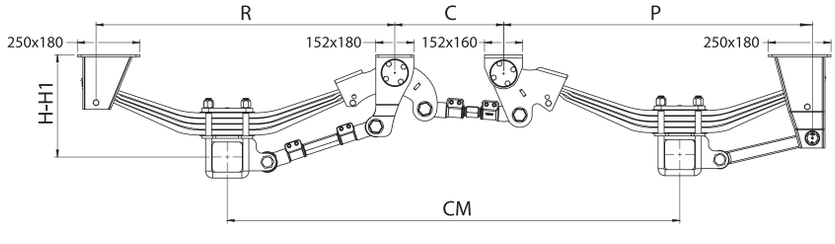

Order Number	Type	CM (mm)	P (mm)	R (mm)	C (mm)	120		140		Capacity (kg)
Sipariş No	Makas Tipi					H (mm)	H1 (mm)	H (mm)	H1 (mm)	Kapasite (kg)
108339	4 Kat/Leaf 100x20x1170	1.810	1.215	1.195	435	400	335	410	345	24.000
108341	3 Kat/Leaf 100x28x1170	1.810	1.215	1.195	435	400	350	410	360	28.000
108340	4 Kat/leaf 100x25x1170	1.810	1.215	1.195	435	400	365	410	375	30.000

108340

Tridem Makas Sistemi
Tridem Leaf Spring System

Makas / *Spring 76 mm*

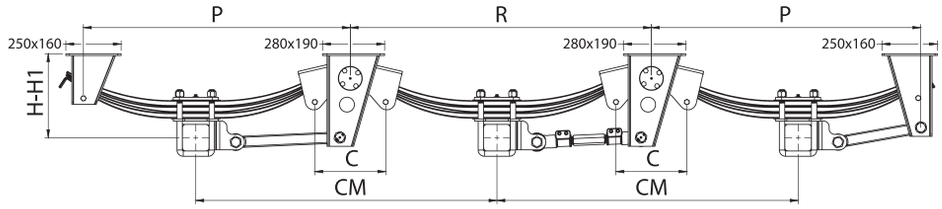

Order Number	Type					120		140		Capacity (kg)
Sipariş No	Makas Tipi	CM (mm)	P (mm)	R (mm)	C (mm)	H (mm)	H1 (mm)	H (mm)	H1 (mm)	Kapasite (kg)
108341	3 Kat/Leaf 76x25x1170	1.360	1.205	1.360	320	395	355	405	365	30.000
108342	3 Kat/Leaf 76x25x1170	1.525	1.285	1.525	470	395	355	405	365	30.000
108343	3 Kat/Leaf 76x25x1000	1.225	1.085	1.225	320	350	328	360	338	36.000
108344	3 Kat/Leaf 76x25x1000	1.375	1.160	1.375	470	350	328	360	338	36.000

108360

Tridem Makas Sistemi
Tridem Leaf Spring System

Makas / *Spring 100 mm*

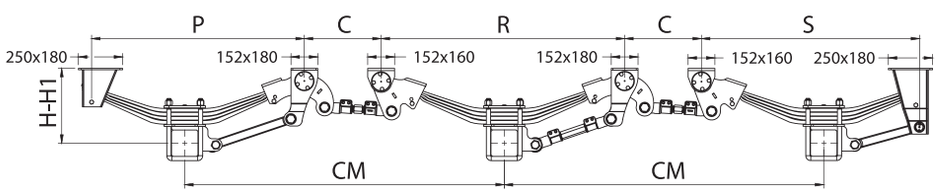

Order Number	Type						120		140		Capacity (kg)
Sipariş No	Makas Tipi	CM (mm)	P (mm)	R (mm)	S (mm)	C (mm)	H (mm)	H1 (mm)	H (mm)	H1 (mm)	Kapasite (kg)
108361	4 Kat/Leaf 100x20x1170	1.810	1.205	1.380	1.215	435	400	335	410	345	36.000
108360	3 Kat/Leaf 100x28x1170	1.810	1.205	1.380	1.215	435	400	350	410	360	42.000
108362	4 Kat/Leaf 100x25x1170	1.810	1.205	1.380	1.215	435	400	365	410	375	45.000

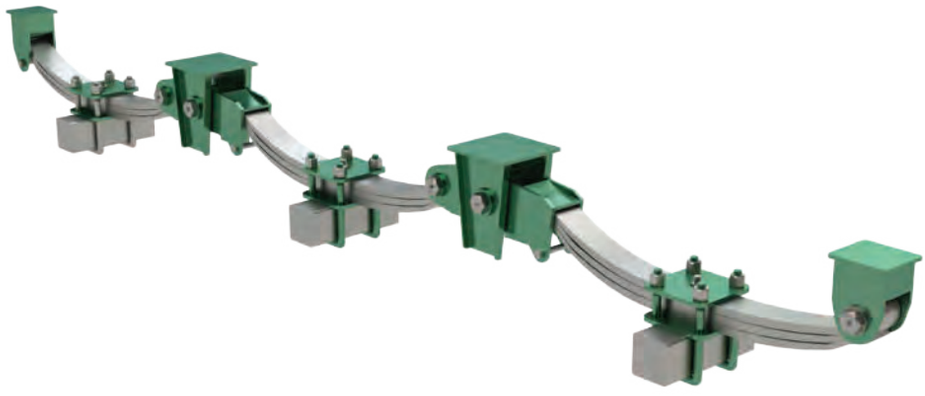

108365

Tridem Makas Sistemi
Tridem Leaf Spring System

Makas / *Spring 100 mm*

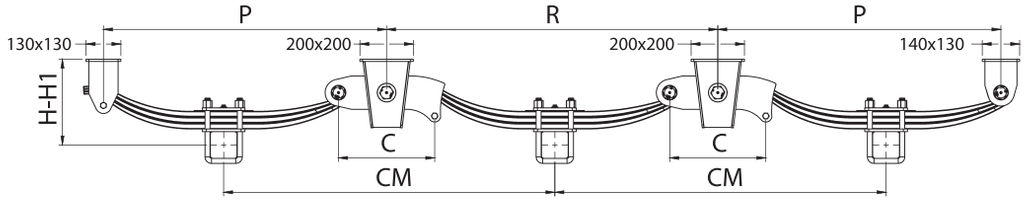

Order Number Sipariş No	Type Makas Tipi	CM (mm)	P (mm)	R (mm)	C (mm)	80 H (mm)	80 H1 (mm)	90 H (mm)	90 H1 (mm)	100 H (mm)	100 H1 (mm)	Capacity (kg) Kapasite (kg)
108366	**3 Kat/Leaf 80x20x950**	**1.240**	1.060	1.240	360	310	268	315	273	320	278	**24.000**
108367	**3 Kat/Leaf 80x25x950**	**1.240**	1.060	1.240	360	325	285	330	290	335	295	**30.000**

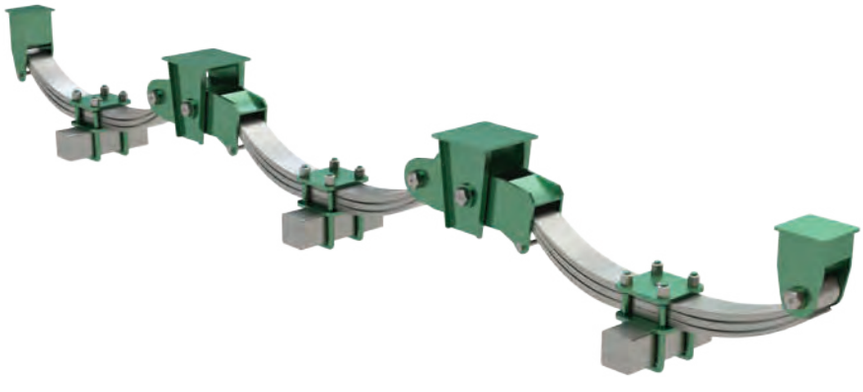

108380

Tridem Makas Sistemi
Tridem Leaf Spring System

Makas / *Spring 100 mm*

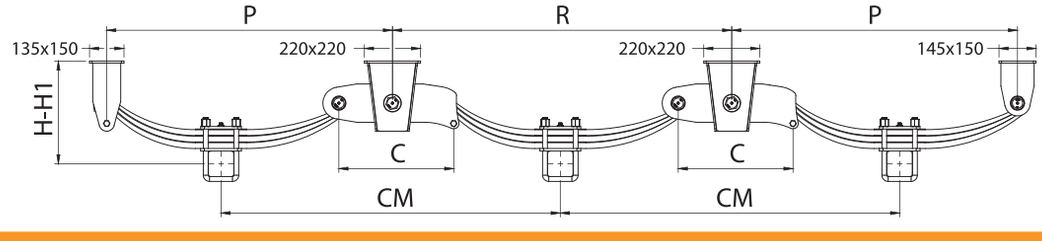

Order Number Sipariş No	Type Makas Tipi	CM (mm)	P (mm)	R (mm)	C (mm)	80 H (mm)	80 H1 (mm)	90 H (mm)	90 H1 (mm)	100 H (mm)	100 H1 (mm)	Capacity (kg) Kapasite (kg)
108381	**2 Kat/Leaf 100x30x1055**	**1.380**	1.170	1.380	450	350	313	355	318	360	323	**30.000**
108383	**3 Kat/Leaf 100x23x950**	**1.330**	1.120	1.330	450	407	382	412	387	417	392	**33.000**
108385	**4 Kat/Leaf 100x20x1170**	**1.520**	1.310	1.520	450	430	365	435	370	440	375	**36.000**

108350

Tridem Makas Sistemi
Tridem Leaf Spring System

Makas / *Spring 100 mm*

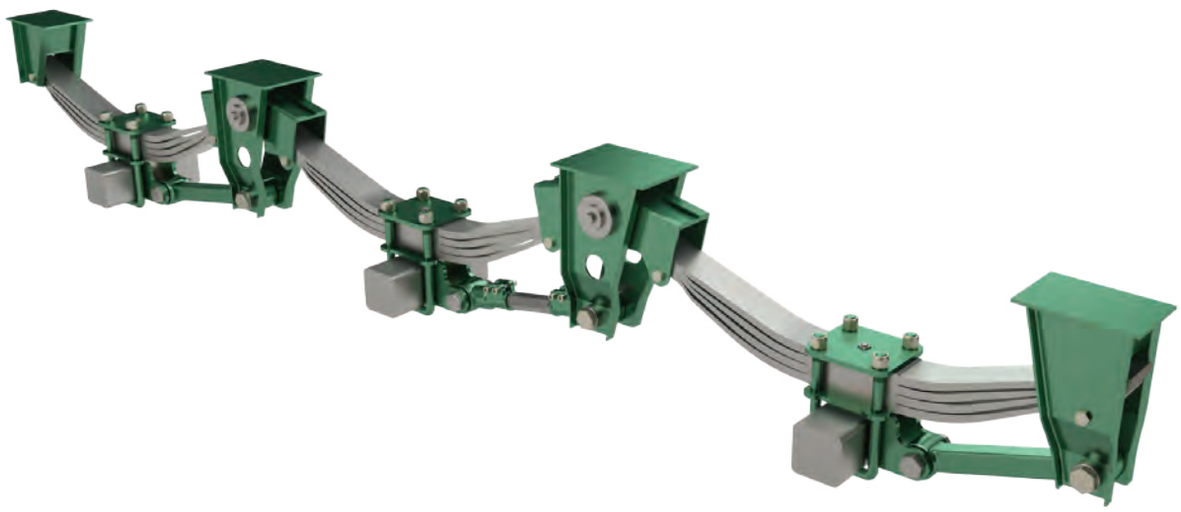

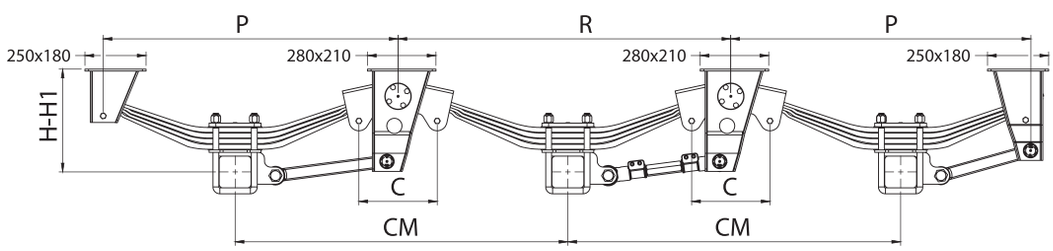

Order Number	Type	CM (mm)	P (mm)	R (mm)	C (mm)	120		140		Capacity (kg)
Sipariş No	**Makas Tipi**					**H (mm)**	**H1 (mm)**	**H (mm)**	**H1 (mm)**	**Kapasite (kg)**
108352	**4 Kat/Leaf 100x20x1170**	**1.360**	1.205	1.360	320	400	335	410	345	**36.000**
108354	**4 Kat/Leaf 100x20x1170**	**1.525**	1.285	1.525	470	400	335	410	345	**36.000**
108349	**3 Kat/Leaf 100x28x1170**	**1.360**	1.205	1.360	320	400	350	410	360	**42.000**
108349-1	**3 Kat/Leaf 100x28x1170**	**1.525**	1.285	1.525	470	400	350	410	360	**42.000**
108350	**4 Kat/Leaf 100x25x1170**	**1.360**	1.205	1.360	320	400	365	410	375	**45.000**
108351	**4 Kat/Leaf 100x25x1170**	**1.525**	1.285	1.525	470	400	365	410	375	**45.000**

108380

Ters Makas Sistemi
Bogie System

Dingil Hariç / *Without Axle*

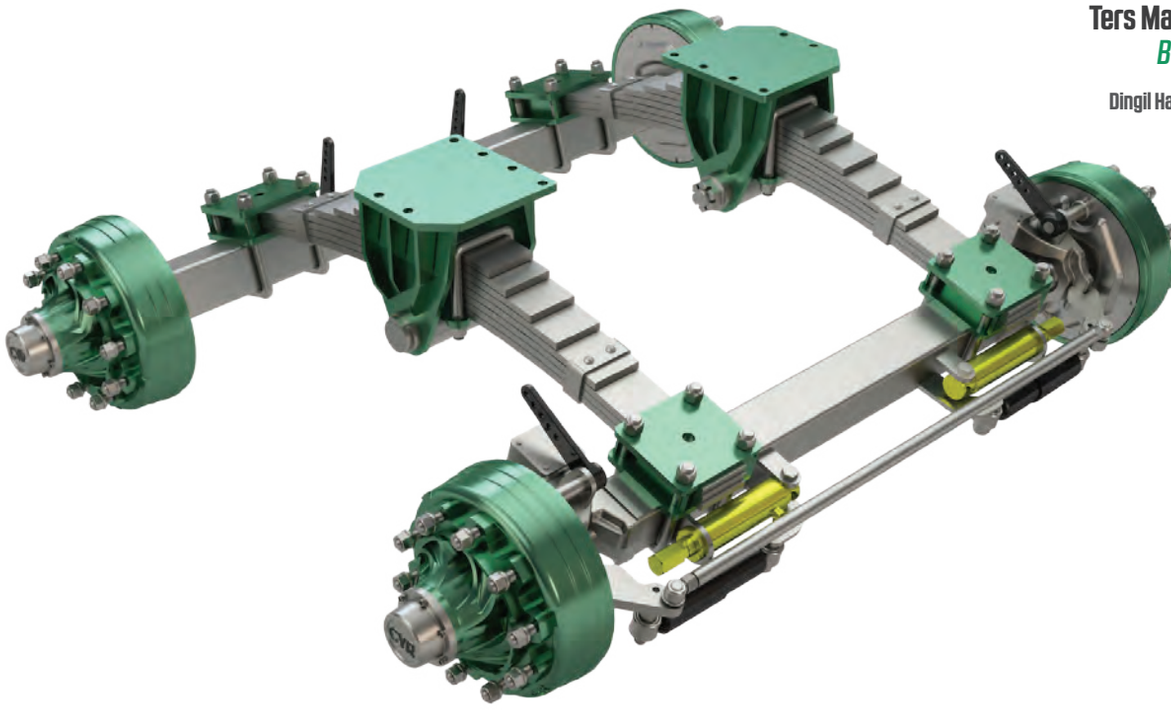

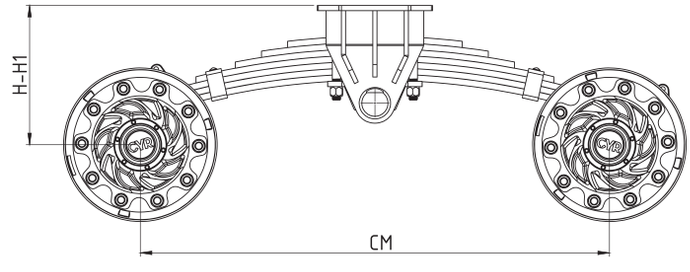

Order Number **Sipariş No**	**CM (mm)**	Square (mm) **Kare (mm)**	**H (mm)**	**H1 (mm)**	Spring Type **Makas Tipi**	Capacity (kg) **Kapasite (kg)**	Brake **Fren**
108382	**1.200**	**80**	315	265	8 Kat/Leaf 100x13	**8.000**	300x60
108384	**1.200**	**90**	325	275	8 Kat/Leaf 100x15	**12.000**	300/90
108400	**1.350**	**100**	390	340	6 Kat/Leaf 120x18	**16.000**	300/90
108410	**1.350**	**120**	430	380	8 Kat/Leaf 120x18	**20.000**	400/80 400/120
108411	**1.450**	**140**	380	305	9 Kat/Leaf 120x18	**20.000**	400/80 400/120
108422	**1.380**	**150**	600	575	3 Kat/Leaf 100x50 Parabolik/Parabolic	**24.000**	420/200

108380

Ters Makas Sistemi
Bogie System

Dingil Hariç / *Without Axle*

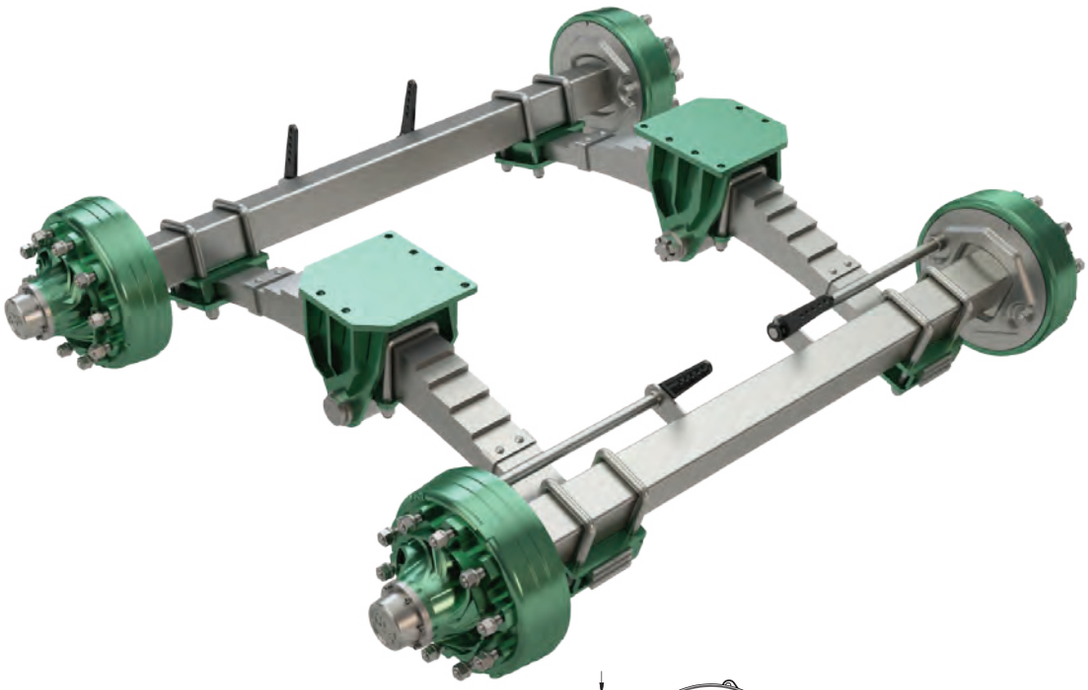

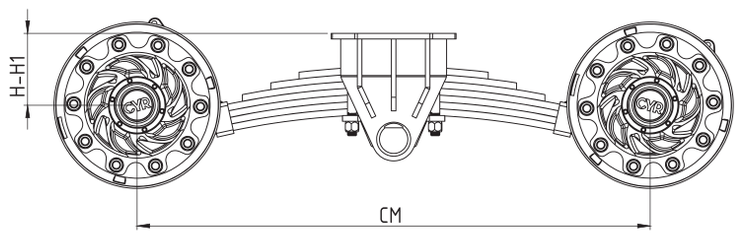

Order Number Sipariş No	CM (mm)	Square (mm) Kare (mm)	H (mm)	H1 (mm)	Spring Type Makas Tipi	Capacity (kg) Kapasite (kg)	Brake Fren
108386	1.200	80	160	110	8 Kat/Leaf 100x13	8.000	300x60
108388	1.200	90	150	100	8 Kat/Leaf 100x15	12.000	300/90
108405	1.350	100	200	150	6 Kat/Leaf 120x18	16.000	300/90
108416	1.350	120	220	170	8 Kat/Leaf 120x18	20.000	400/80 400/120
108417	1.450	140	190	115	9 Kat/Leaf 120x18	20.000	400/80 400/120
108424	1.500	150	340	315	3 Kat/Leaf 100x50 Parabolik/Parabolic	24.000	420/200

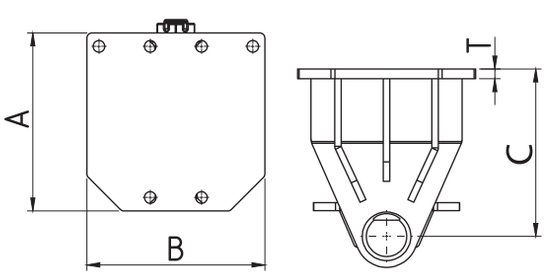

Capacity Kapasite	A	B	C	T
8.000	320	300	240	12
12.000	320	300	240	12
16.000	330	330	280	15
20.000	330	330	310	18
24.000	470	370	510	20

108750

Sarkaç Dingil
Pendular Axle

Dingil Hariç / *Without Axle.*

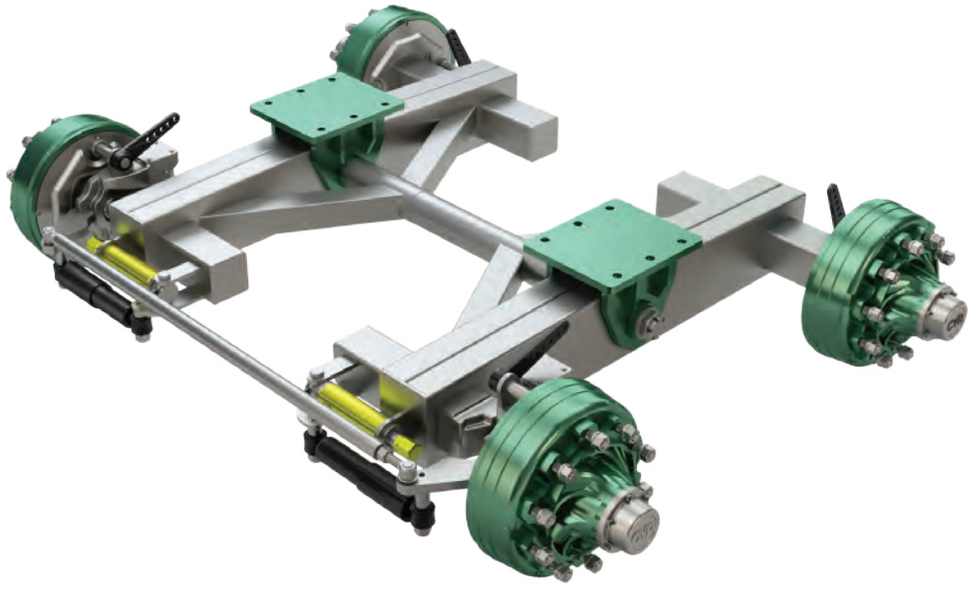

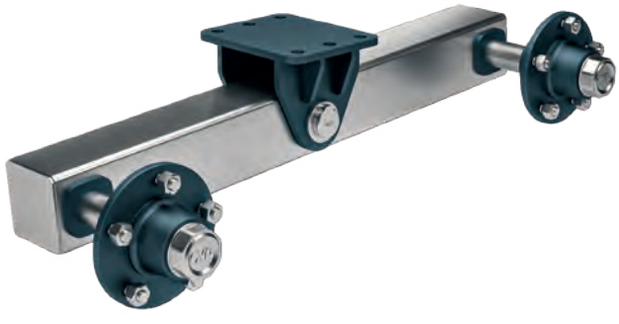

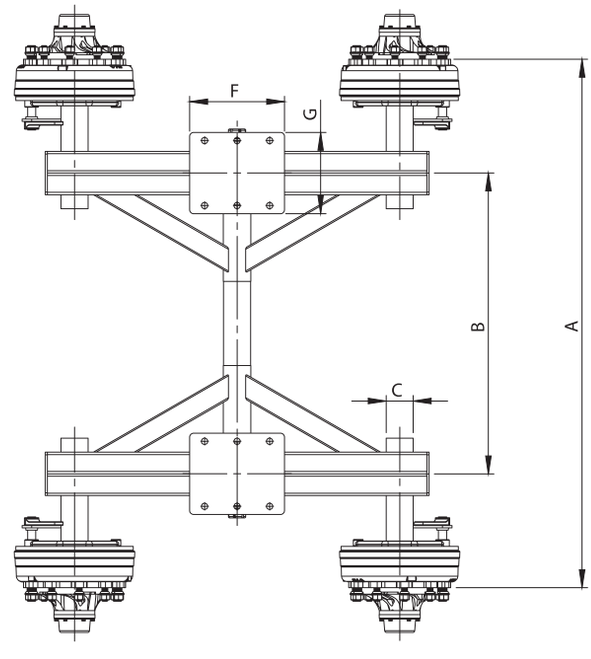

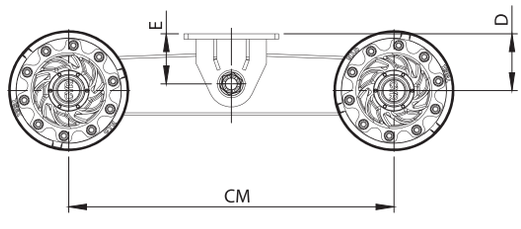

Order Number **Sipariş No**	Bolt **Bijon**	Square C **Kare C**	A (mm)	B (mm)	CM (mm)	D (mm)	E (mm)	F/G (mm)	Brake Lining **Balata**	Capacity (kg) **Kapasite (kg)**
108751	**5**	**50**	1.450	1.000	900	132	132	200/240	260/50	**5.000**
108752	**6**	**60**	1.600	1.050	1.000	160	160	350/250	260/50	**6.000**
108754	**6**	**70**	1.700	1.100	1.000	160	160	350/250	300x60	**9.000**
108756	**8**	**80**	1.900	1.100	1.200	200	180	350/250	300x90	**12.000**
108758	**8**	**90**	1.950	1.100	1.250	210	185	350/300	400x80	**14.000**
108760	**10**	**100**	2.000	1.050	1.400	210	185	400/300	400x120	**20.000**
108762	**8**	**100 P**	2.050	1.100	1.200	200	180	350/250	300x90	**12.000**
108764	**8**	**120 P**	2.050	1.100	1.250	210	185	350/300	400x80	**14.000**
108768	**10**	**120 P**	2.050	1.050	1.400	210	185	400/300	400x120	**20.000**

Dönen Dingil / *Steering Axle*

108500

Hidrolik Süspansiyonlu Makaslı Dingil Sistemi

Hydraulic Suspension Axle System / With Leaf Spring

Dingil Hariç / *Without Axle.*

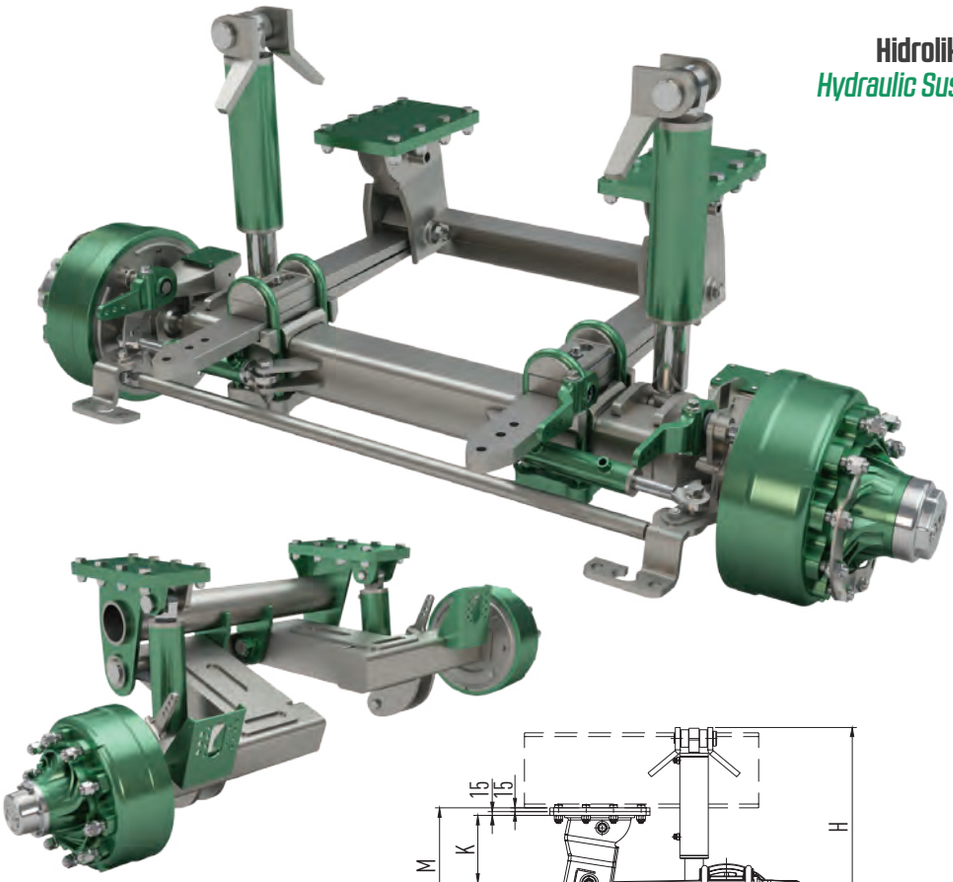

Römork şasisinin performansı, süspansiyonlarının kaliteli olmasına bağlıdır. Hidrolik süspansiyon sistemi tüm arazi şartlarında römorkun dayanımını ve dengesini sağlaması için üretilmiştir. Hidrolik süspansiyon tarım sektöründe nakliyatta karşılaşılan problemleri gidermek amacıyla tasarlanmış olup, tarım römorklarında dingillerin maruz kaldığı büyük darbelere karşı güvenli sürüşü ve yol tutuş kabiliyeti sağlar.

The performance of trailer chassis depends on the quality of suspensions. Hydraulic suspension system is produced in order to provide resistance of trailer and balance in all territory circumstances.

Hydraulic suspension is designed in order to solve the problem of transport in agriculture sector. Axles are exposed to big impacts in agriculture trailers and hydraulic suspension provides secure drive and road-holding ability.

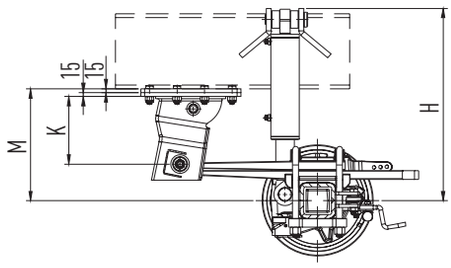

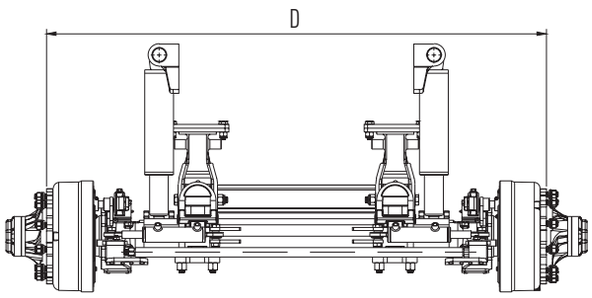

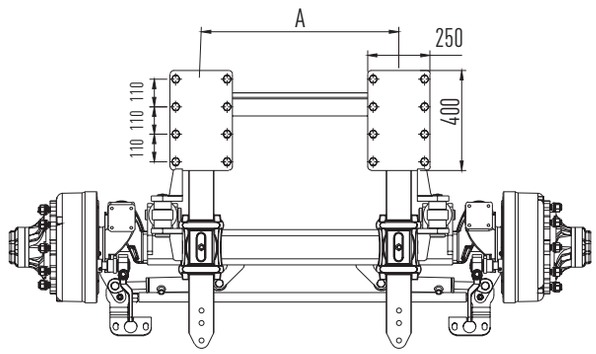

Order Number **Sipariş No**		Brake Lining **Balata**	Bearing Size **Rulman Ölçüsü**	Lift Stroke (mm) **Lift Strok (mm)**	**K (mm)**	**M (mm)**	**H (mm)**	Capacity (kg) **Kapasite (kg)**
108502	**120**	400x80	32213/32217	220 (± 110)	320	490	670	**9.000**
108504	**120**	400x80	32213/32217	220 (± 110)	270	440	670	**9.000**
108506	**120**	400x80	32213/32217	220 (± 110)	240	410	670	**9.000**
108508	**140**	400x120	32213/32217	270 (± 135)	320	495	770	**11.000**
108510	**140**	400x120	32213/32217	270 (± 135)	270	445	770	**11.000**
108512	**140**	400x120	32213/32217	270 (± 135)	240	415	770	**11.000**
108514	**150**	420x200	32215/33021	270 (± 135)	320	500	775	**14.000**
108516	**150**	420x200	32215/33021	270 (± 135)	270	450	775	**14.000**
108518	**150**	420x200	32215/33021	270 (± 135)	240	420	775	**14.000**

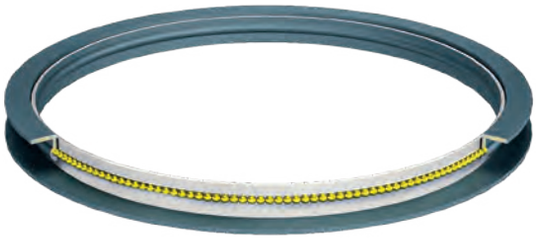

109500

Döner Tabla U Tipi - Köşebent

Turntable U Type

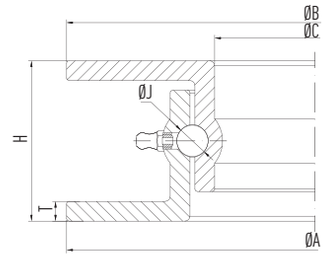

Model 1

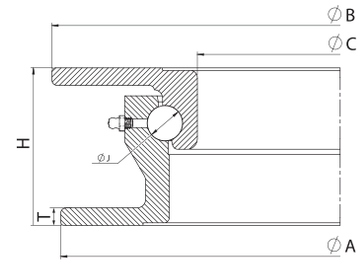

Model 2

Order No **Sipariş No**	Diameter-A (cm) **Döner Çapı-A (cm)**	Height-H (mm) **Yükseklik-H (mm)**	Thickness - T (mm) **Kalınlık - T (mm)**	Bearing-J **Bilya-J**	Capacity Kg. **Kapasite Kg.**	Model **Model**
109503	30	55	6	Ø 12.7	500	Model 1
109504	40	55	6	Ø 12.7	600	Model 1
109505	50	55	6	Ø 12.7	900	Model 1
109506	60	55	6	Ø 12.7	1.300	Model 1
109507	70	60	8	Ø 12.7	2.000	Model 1
109508	80	60	8	Ø 12.7	2.500	Model 1
109509	90	70	8	Ø 14	4.000	Model 1
109510	100	70	8	Ø 14	6.000	Model 1
109515	105	70	8	Ø 14	7.000	Model 1
109511	110	70	8	Ø 14	8.000	Model 1
109520	100	80	8	Ø 16	8.000	Model 1
109521	110	80	8	Ø 16	9.000	Model 1
109530	110	90	8	Ø 16	10.000	Model 1
109540	110	90	10	Ø 22	12.000	Model 1
110191	110	90	10	Ø 20	14.500	Model 2
109545	120	70	8	Ø 16	12.000	Model 1
109550	120	90	8	Ø 16	12.000	Model 1
109560	120	90	10	Ø 22	14.000	Model 1
110171	120	90	10	Ø 20	17.500	Model 2

109000

Döner Tabla Z Tipi
Turntable Z Type

Welded
Kaynaklı

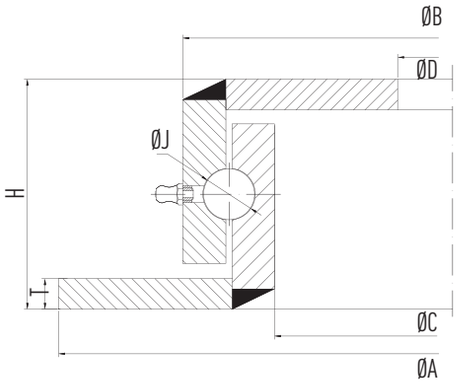

Order No **Sipariş No**	Diameter-A (cm) **Döner Çapı-A (cm)**	Height-H (mm) **Yükseklik-H (mm)**	Thickness - T (mm) **Kalınlık - T (mm)**	Bearing-J **Bilya-J**	Capacity Kg. **Kapasite Kg.**
109080	100	65	10	Ø 12.7	6.000
109090	110	65	10	Ø 12.7	10.000

110000

Döner Tabla U Tipi
Turntable U Type

Welded
Kaynaklı

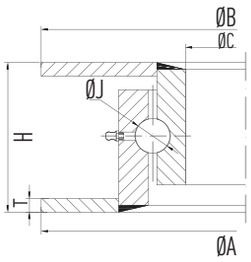

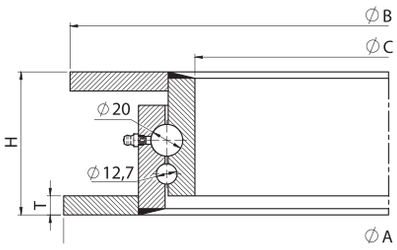

Order No **Sipariş No**	Diameter-A (cm) **Döner Çapı-A (cm)**	Height-H (mm) **Yükseklik-H (mm)**	Thickness - T (mm) **Kalınlık - T (mm)**	Bearing-J **Bilya-J**	Capacity Kg. **Kapasite Kg.**
110101	120	65	10	Ø 14.0	14.000
110160	110	90	12	Ø 20.0	14.500
110170	120	90	12	Ø 20.0	17.500
110190	110	90	12	Ø 12.7+Ø 20.0	20.000
110192	120	90	12	Ø 12.7+Ø 20.0	23.000
110195	130	90	12	Ø 20.0	20.000
110200	130	90	12	Ø 12.7+Ø 20.0	25.000

113000

Borulu Lift
Hydraulic Cylinder

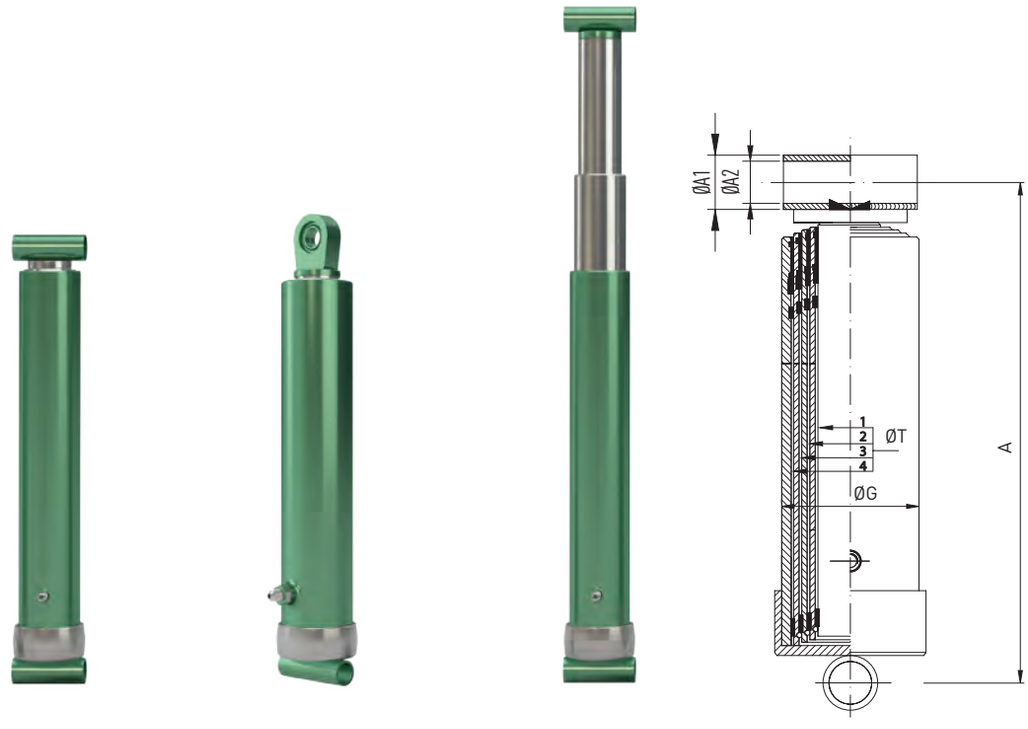

(Kromlu, Çelik Çekme Boru, Boğazdan Keçeli, Teleskobik)
(Chromed, Steel Drawned Tube, With Sealing Ring, Telescopic)

Alt Borulu, Üst Dönen Model
Lower Part With Tube, Upper Part With Rotation

Alt ve Üst Borulu Model
Lower And Upper Part With Tube

Order Number	Stage (T)	Closed Length (A)	Capacity	Outer Dia. G (mm)	Stroke (mm)	Nipple	Hydraulic Cap.	**Kademe Çapları (mm)** / Stage Dia. (mm)						
Sipariş No	**Kademe (T)**	**Kapalı Boy (A)**	**Kapasite**	**Dış Çap G (mm)**	**Strok (mm)**	**Nipel**	**Yağ Hacmi (Lt)**	**30**	**50**	**60**	**75**	**90**	**105**	**125**
113002	2	40 cm	2 Ton	75	450	5/8"	1,4	X	X					
113009	2	50 cm	2 Ton	75	650	5/8"	1.8	X	X					
113003	2	60 cm	2 Ton	75	850	5/8"	2,1	X	X					
113004	2	40 cm	3 Ton	90	450	5/8"	2,6			X	X			
113005	2	50 cm	3 Ton	90	650	5/8"	3,5			X	X			
113006	2	60 cm	3 Ton	90	850	5/8"	4,5			X	X			
113007	1	73 cm	5 Ton	105	500	5/8"	6,9				X	X		
113010	2	63 cm	5 Ton	105	910	5/8"	7,1				X	X		
113020	2	73 cm	5 Ton	105	1.110	5/8"	8,5				X	X		
113030	2	90 cm	5 Ton	105	1.450	5/8"	11,2				X	X		
113080	3	63 cm	5 Ton	105	1.370	5/8"	8			X	X	X		
113090	3	75 cm	5 Ton	105	1.730	5/8"	10			X	X	X		
113100	3	80 cm	5 Ton	105	1.880	5/8"	11			X	X	X		
113105	3	85 cm	5 Ton	105	2.030	5/8"	11,75			X	X	X		
113108	3	90 cm	5 Ton	105	2.180	5/8"	12,5			X	X	X		
113040	3	63 cm	10 Ton	127	1.370	3/4"	11,4				X	X	X	
113050	3	75 cm	10 Ton	127	1.730	3/4"	14,2				X	X	X	
113060	3	80 cm	10 Ton	127	1.880	3/4"	15,6				X	X	X	
113065	3	85 cm	10Ton	127	2.030	3/4"	16,8				X	X	X	
113070	3	90 cm	10 Ton	127	2.180	3/4"	18,9				X	X	X	
113160	3	63 cm	15 Ton	152	1.370	7/8"	16					X	X	X
113170	3	75 cm	15 Ton	152	1.730	7/8"	20,2					X	X	X
113180	3	80 cm	15 Ton	152	1.880	7/8"	22					X	X	X

113000

Borulu Lift
Hydraulic Cylinder

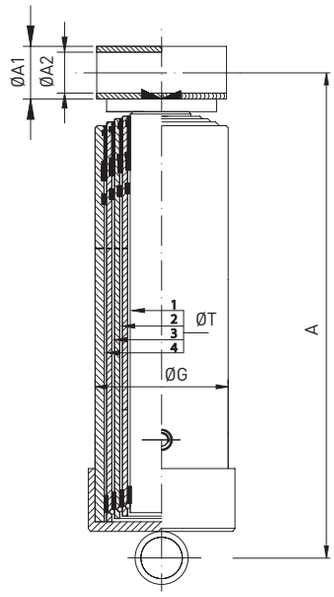

(Kromlu, Çelik Çekme Boru, Boğazdan Keçeli, Teleskobik)
(Chromed, Steel Drawned Tube, With Sealing Ring, Telescopic)

Order Number	Stage (T)	Closed Length (A)	Capacity	Outer Dia. G (mm)	Stroke (mm)	Nipple	Hydraulic Cap.	**Kademe Çapları (mm)** / Stage Dia. (mm)						
Sipariş No	**Kademe (T)**	**Kapalı Boy (A)**	**Kapasite**	**Dış Çap G (mm)**	**Strok (mm)**	**Nipel**	**Yağ Hacmi (Lt)**	**60**	**75**	**90**	**105**	**125**	**145**	**165**
113185	3	90 cm	15 Ton	152	2.180	7/8"	26			X	X	X		
113187	3	100 cm	15 Ton	152	2.480	7/8"	30			X	X	X		
113110	4	63 cm	10 Ton	127	1.830	3/4"	12	X	X	X	X			
113115	4	70 cm	10 Ton	127	2.080	3/4"	13.8	X	X	X	X			
113120	4	75 cm	10 Ton	127	2.310	3/4"	15,3	X	X	X	X			
113130	4	80 cm	10 Ton	127	2.510	3/4"	16,6	X	X	X	X			
113135	4	85 cm	10 Ton	127	2.710	3/4"	18	X	X	X	X			
113140	4	90 cm	10 Ton	127	2.910	3/4"	19,3	X	X	X	X			
113150	4	100 cm	10 Ton	127	3.310	3/4"	22	X	X	X	X			
113190	4	63 cm	15 Ton	152	1.830	7/8"	17,3		X	X	X	X		
113200	4	75 cm	15 Ton	152	2.310	7/8"	21,8		X	X	X	X		
113210	4	80 cm	15 Ton	152	2.510	7/8"	24,6		X	X	X	X		
113215	4	90 cm	15 Ton	152	2.910	7/8"	28,1		X	X	X	X		
113217	4	100 cm	15 Ton	152	3.310	7/8"	31,8							
113230	5	40 cm	15 Ton	152	1.150	7/8"	12,5	X	X	X	X	X		
113232	5	50 cm	15 Ton	152	1.650	7/8"	15	X	X	X	X	X		
113235	5	63 cm	15 Ton	152	2.300	7/8"	18	X	X	X	X	X		
113240	5	75 cm	15 Ton	152	2.900	7/8"	23,1	X	X	X	X	X		
113250	5	63 cm	20 Ton	170	2.290	7/8"	25,4		X	X	X	X	X	
113260	5	75 cm	20 Ton	170	2.890	7/8"	32,2		X	X	X	X	X	
113270	5	80 cm	20 Ton	170	3.140	7/8"	35		X	X	X	X	X	
113280	5	63 cm	25 Ton	195	2.250	7/8"	33,8			X	X	X	X	X
113290	5	75 cm	25 Ton	195	2.850	7/8"	42,9			X	X	X	X	X
113300	5	80 cm	25 Ton	195	3.100	7/8"	50,5			X	X	X	X	X

114000

Mafsallı Lift

Articulated Hydraulic Cylinder

Model 1 Model 1 Model 2 Model 3 Model 4

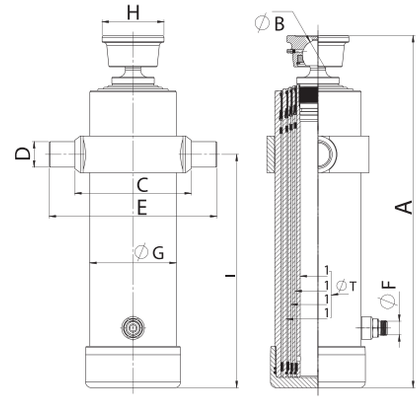

Order Number	Stage (T)	Closed Length (A)	Capacity	Model	Outer Dia. G (mm)	Stroke (mm)	Nipple	Hydraulic Cap.	**Kademe Çapları (mm)** / Stage Dia. (mm)					
Sipariş No	**Kademe (T)**	**Kapalı Boy (A)**	**Kapasite**	**Model**	**Dış Çap G (mm)**	**Strok (mm)**	**Nipel**	**Yağ Hacmi (Lt)**	**60**	**75**	**90**	**105**	**125**	**145**
114001	2	44 cm	3 Ton	1	90	450	5/8"	2,6	X	X				
114003	2	53 cm	3 Ton	1	90	650	5/8"	3,5	X	X				
114004	2	63 cm	3 Ton	1	90	850	5/8"	4,5	X	X				
114005	2	39 cm	3 Ton	2	90	450	5/8"	2,6	X	X				
114007	2	48 cm	3 Ton	2	90	650	5/8"	3,5	X	X				
114009	2	58 cm	3 Ton	2	90	850	5/8"	4,5	X	X				
114012	2	41 cm	3 Ton	4	90	450	5/8"	2,6	X	X				
114014	2	50 cm	3 Ton	4	90	650	5/8"	3,5	X	X				
114016	2	60 cm	3 Ton	4	90	850	5/8"	4,5	X	X				
114018	2	50 cm	5 Ton	1	105	610	5/8''	4,8		X	X			
114022	2	65 cm	5 Ton	1	105	910	5/8"	7,1		X	X			
114010	2	39 cm	5 Ton	2	105	480	5/8"	3,8		X	X			
114024	2	45 cm	5 Ton	2	105	610	5/8"	4,8		X	X			
114026	2	61 cm	5 Ton	2	105	910	5/8"	7,1		X	X			
114028	2	52 cm	5 Ton	3	105	610	5/8"	4,8		X	X			
114032	2	67 cm	5 Ton	3	105	910	5/8"	7,1		X	X			
114034	2	49 cm	5 Ton	4	105	610	5/8"	4,8		X	X			
114036	2	64 cm	5 Ton	4	105	910	5/8"	7,1		X	X			
114042	3	50cm	5 Ton	1	105	920	5/8"	5,4	X	X	X			
114044	3	66 cm	5 Ton	1	105	1.370	5/8"	8	X	X	X			
114046	3	46 cm	5 Ton	2	105	920	5/8"	5,4	X	X	X			
114015	3	61 cm	5 Ton	2	105	1.370	5/8"	8	X	X	X			
114048	3	51 cm	5 Ton	3	105	920	5/8"	5,4	X	X	X			
114051	3	66 cm	5 Ton	3	105	1.370	5/8"	8	X	X	X			

114000

Mafsallı Lift

Articulated Hydraulic Cylinder

Model 1 Model 1 Model 2 Model 3 Model 4

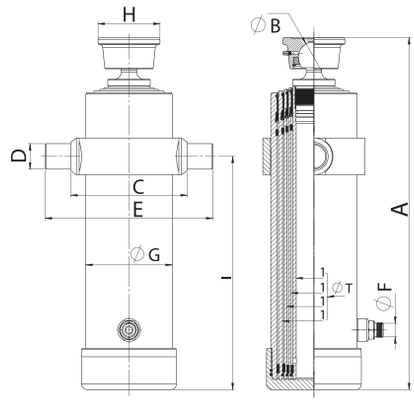

Order Number Sipariş No	Stage (T) Kademe (T)	Closed Length (A) Kapalı Boy (A)	Capacity Kapasite	Model Model	Outer Dia. G (mm) Dış Çap G (mm)	Stroke (mm) Strok (mm)	Nipple Nipel	Hydraulic Cap. Yağ Hacmi (Lt)	**Kademe Çapları (mm)** / Stage Dia. (mm) 60	75	90	105	125	145	165
114053	3	48 cm	5 Ton	4	105	920	5/8"	5,4	X	X	X				
114055	3	63 cm	5 Ton	4	105	1.370	5/8"	8	X	X	X				
114057	3	50 cm	10 Ton	1	127	890	3/4"	7,5		X	X	X			
114060	3	66 cm	10 Ton	1	127	1.370	3/4"	11,4		X	X	X			
114068	3	45 cm	10 Ton	1	127	890	3/4"	7,5		X	X	X			
114020	3	61 cm	10 Ton	2	127	1.370	3/4"	11,4		X	X	X			
114072	3	52 cm	10 Ton	3	127	890	3/4"	7,5		X	X	X			
114074	3	68 cm	10 Ton	3	127	1.370	3/4"	11,4		X	X	X			
114076	3	49 cm	10 Ton	4	127	890	3/4"	7,5		X	X	X			
114078	3	65 cm	10 Ton	4	127	1.370	3/4"	11,4		X	X	X			
114080	3	50 cm	15 Ton	1	152	870	7/8"	10,2			X	X	X		
114061	3	66 cm	15 Ton	1	152	1.370	7/8"	16			X	X	X		
114082	3	45 cm	15 Ton	2	152	870	7/8"	10,2			X	X	X		
114084	3	61 cm	15 Ton	2	152	1.370	7/8"	16			X	X	X		
114086	3	52 cm	15 Ton	3	152	870	7/8"	10,2			X	X	X		
114088	3	68 cm	15 Ton	3	152	1.370	7/8"	16			X	X	X		
114090	3	48 cm	15 Ton	4	152	870	7/8"	10,2			X	X	X		
114092	3	65 cm	15 Ton	4	152	1.370	7/8"	16			X	X	X		
114094	4	40 cm	10 Ton	1	127	790	3/4"	5	X	X	X	X			
114096	4	50 cm	10 Ton	1	127	1.190	3/4"	7,5	X	X	X	X			
114065	4	66 cm	10 Ton	1	127	1.830	3/4"	12	X	X	X	X			
114098	4	35 cm	10 Ton	2	127	790	3/4"	5	X	X	X	X			
114100	4	45 cm	10 Ton	2	127	1.190	3/4"	7,5	X	X	X	X			
114030	4	61 cm	10 Ton	2	127	1.830	3/4"	12	X	X	X	X			

114000

Mafsallı Lift

Articulated Hydraulic Cylinder

Model 1 | Model 1 | Model 2 | Model 3 | Model 4

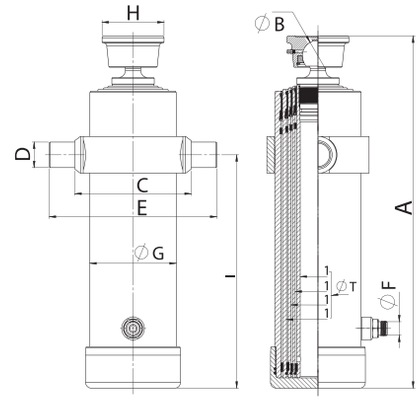

Order Number	Stage (T)	Closed Length (A)	Capacity	Model	Outer Dia. G (mm)	Stroke (mm)	Nipple	Hydraulic Cap.	**Kademe Çapları (mm)** / Stage Dia. (mm)					
Sipariş No	**Kademe (T)**	**Kapalı Boy (A)**	**Kapasite**	**Model**	**Dış Çap G (mm)**	**Strok (mm)**	**Nipel**	**Yağ Hacmi (Lt)**	**60**	**75**	**90**	**105**	**125**	**145**
114102	4	40 cm	10 Ton	3	127	790	3/4"	5	X	X	X	X		
114104	4	50 cm	10 Ton	3	127	1.190	3/4"	7,5	X	X	X	X		
114106	4	66 cm	10 Ton	3	127	1.830	3/4"	12	X	X	X	X		
114108	4	37 cm	10 Ton	4	127	790	3/4"	5	X	X	X	X		
114110	4	47 cm	10 Ton	4	127	1.190	3/4"	7,5	X	X	X	X		
114112	4	63 cm	10 Ton	4	127	1.830	3/4"	12	X	X	X	X		
114114	4	40 cm	15 Ton	1	152	770	7/8"	7,3		X	X	X	X	
114116	4	50 cm	15 Ton	1	152	1.170	7/8"	11,2		X	X	X	X	
114118	4	66 cm	15 Ton	1	152	1.830	7/8"	17,3		X	X	X	X	
114120	4	45 cm	15 Ton	2	152	1.170	7/8"	11,2		X	X	X	X	
114045	4	63 cm	15 Ton	2	152	1.830	7/8"	17,3		X	X	X	X	
114122	4	52 cm	15 Ton	3	152	1.170	7/8"	11,2		X	X	X	X	
114124	4	68 cm	15 Ton	3	152	1.830	7/8"	17,3		X	X	X	X	
114126	4	49 cm	15 Ton	4	152	1.170	7/8"	11,2		X	X	X	X	
114128	4	65 cm	15 Ton	4	152	1.830	7/8"	17,3		X	X	X	X	
114050	5	40 cm	15 Ton	1	152	970	7/8"	7,7	X	X	X	X	X	
114130	5	50 cm	15 Ton	1	152	1.470	7/8"	11,8	X	X	X	X	X	
114132	5	66 cm	15 Ton	1	152	2.300	7/8"	18	X	X	X	X	X	
114134	5	46 cm	15 Ton	2	152	1.470	7/8"	11,8	X	X	X	X	X	
114136	5	62 cm	15 Ton	2	152	2.300	7/8"	18	X	X	X	X	X	
114138	5	51 cm	15 Ton	3	152	1.470	7/8"	11,8	X	X	X	X	X	
114140	5	67 cm	15 Ton	3	152	2.300	7/8"	18	X	X	X	X	X	
114142	5	47 cm	15 Ton	4	152	1.470	7/8"	11,8	X	X	X	X	X	
114144	5	64 cm	15 Ton	4	152	2.300	7/8"	18	X	X	X	X	X	

114000

Mafsallı Lift
Articulated Hydraulic Cylinder

Model 1 | Model 1 | Model 2 | Model 3 | Model 4

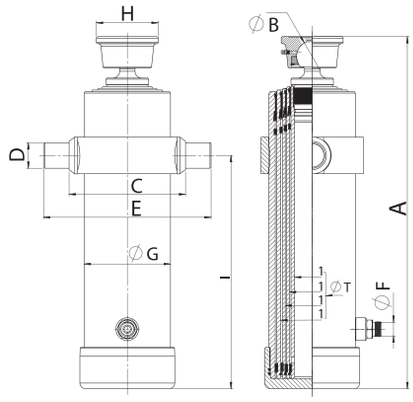

Order Number / Sipariş No	Stage (T) / Kademe (T)	Closed Length (A) / Kapalı Boy (A)	Capacity / Kapasite	Model / Model	Outer Dia. G (mm) / Dış Çap G (mm)	Stroke (mm) / Strok (mm)	Nipple / Nipel	Hydraulic Cap. / Yağ Hacmi (Lt)	Kademe Çapları (mm) / Stage Dia. (mm) 60	75	90	105	125	145	165
114146	5	50 cm	20 Ton	1	170	1.420	7/8"	15,8		X	X	X	X	X	
114148	5	67 cm	20 Ton	1	170	2.290	7/8"	25,4		X	X	X	X	X	
114150	5	80 cm	20 Ton	1	170	2.890	7/8"	32,2		X	X	X	X	X	
114152	5	45 cm	20 Ton	2	170	1.420	7/8"	15,8		X	X	X	X	X	
114154	5	62 cm	20 Ton	2	170	2.290	7/8"	25,4		X	X	X	X	X	
114156	5	74 cm	20 Ton	2	170	2.890	7/8"	32,2		X	X	X	X	X	
114158	5	50 cm	25 Ton	1	195	1.410	7/8"	21			X	X	X	X	X
114160	5	67 cm	25 Ton	1	195	2.250	7/8"	33,8			X	X	X	X	X
114162	5	80 cm	25 Ton	1	195	2.850	7/8"	42,9			X	X	X	X	X
114164	5	45 cm	25 Ton	2	195	1.410	7/8"	21			X	X	X	X	X
114166	5	62 cm	25 Ton	2	195	2.250	7/8"	33,8			X	X	X	X	X
114168	5	74 cm	25 Ton	2	195	2.850	7/8"	42,9			X	X	X	X	X

115929

Strok Kontrol Valfı
Limit Control Valve

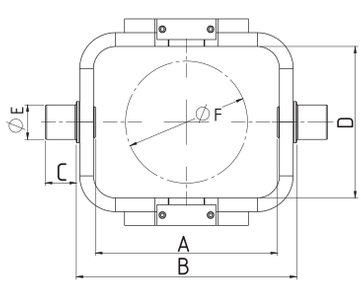

114063

3 Yana Devirme Mafsalı
Three Way Tipping Bracket

Order Number / Sipariş No	Product Type / Ürün Cinsi	A (mm) / A (mm)	B (mm) / B (mm)	C (mm) / C (mm)	D (mm) / D (mm)	ØE / ØE	ØF / ØF
114063	**3 Yana Devirme Mafsalı 5 Ton** Bracket 5 Ton	180	225	45	135	40	108
114066	**3 Yana Devirme Mafsalı 10 Ton** Bracket 10 Ton	237	306	45	175	45	127
114064	**3 Yana Devirme Mafsalı 15 Ton** Bracket 15 Ton	224	310	45	220	50	152
114062	**3 Yana Devirme Mafsalı 20 Ton** Bracket 20 Ton	270	330	50	220	50	170
114067	**3 Yana Devirme Mafsalı 25 Ton** Bracket 25 Ton	277	340	60	240	50	190

115000

Çift Yönlü Hidrolik Silindirler
Double Action Hydraulic Cylinders

1 2 3 4 5 6 7 8 9 10 11 12

Tek Yönlü
Single Action

Order Number **Sipariş No**	Lift Type **Liftin Cinsi**	Model **Model**	Tube Dia. (mm) **Boru Çapı (mm)**	Rod Dia. (mm) **Mil Çapı (mm)**	Hole Dia. (mm) **Delik Merkezi (mm)**	Stroke (mm) **Strok (mm)**	Capacity Kg **Kapasite Kg**
115010	**Goble Lift** / Goble Cylinder	5	63x75	Ø 45	750	495	6.200
115020	**Goble Lift** / Goble Cylinder	3	80x95	Ø 40	450	190	10.000
115021	**Goble Lift** / Goble Cylinder	10	105x90	Ø 50	580	340	12.700
115030	**Goble Lift (Mafsallı)** / Articulated Goble Cylinder	6	63x75	Ø 40	950	510	6.200
115032	**Goble Lift (Mafsallı)** / Articulated Goble Cylinder	6	63x75	Ø 40	800	370	6.200
115040	**Kova Lift** / Digger Cylinder	4	63x75	Ø 45	525	300	6.200
115050	**Rotatiller Lifti** / Rotatiller Cylinder	2	40x50	Ø 25	465	285	2.500
115059	**Rotatiller Lifti** / Rotatiller Cylinder	2	40x50	Ø 25	620	430	2.500
115060	**Rotatiller Lifti** / Rotatiller Cylinder	2	40x50	Ø 25	715	535	2.500
115070	**Orta Kol Lifti (Mafsallı)** Articulated Hydraulik Side Link Cylinder	1	63x75	Ø 45	750	415	6.200
115080	**Ön Kepçe Lifti** / Front Digger Cylinder	5	63x75	Ø 45	910	665	6.200
115090	**Fındık Patoz Lifti** / Haymaker Cylinder	7	60x70	Ø 40	600	395	5.600
115100	**Fındık Patoz Lifti** / Haymaker Cylinder	7	60x70	Ø 40	910	695	5.600
115110	**Yem Karma Kapak Lifti** / Mixer Lid Cylinder	8	50x60	Ø 30	600	395	3.900
115120	**Kriko Lifti** / Jack Cylinder	9	63x75	Ø 40	650	440	6.200
115130	**Mibzer Lifti** / Sowing Machine Cylinder	12	50x60	Ø 30	335	130	3.900
115140	**Diskaro Lifti** / Discharrow Cylinder	-	50x60	Ø 30	945	760	3.900
115150	**Tek Yönlü Arka Kapak Lifti** / Back Lid Cylinder	11	63x75	Ø 50	865	575	6.200
115160	**Tek Yönlü Arka Kapak Lifti** / Back Lid Cylinder	11	63x75	Ø 50	950	550	6.200

200 bar pompa basıncındaki değerlerdir.
The above values for 200 bar pumps.

115250

Orta Kol Lifti Mafsallı / Kilitli
Articulated Hydraulic Side Link Cylinder / With Lock

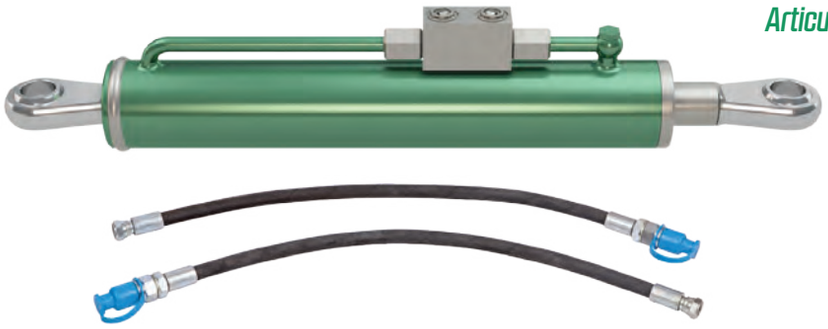

Order Number **Sipariş No**	Lift Type **Liftin Cinsi**	Hole Dia. (mm) **Delik Merkezi (mm)**	Tube Dia. (mm) **Boru Çapı (mm)**	Rod Dia. (mm) **Mil Çapı (mm)**	Stroke (mm) **Strok (mm)**
115252	**Orta Kol Lifti** / Hydraulic Side Link Cylinder	500	60x70	Ø 35	180
115255	**Orta Kol Lifti** / Hydraulic Side Link Cylinder	550	60x70	Ø 35	230
115256	**Orta Kol Lifti** / Hydraulic Side Link Cylinder	600	60x70	Ø 35	280
115257	**Orta Kol Lifti** / Hydraulic Side Link Cylinder	650	60x70	Ø 35	330
115259	**Orta Kol Lifti** / Hydraulic Side Link Cylinder	700	60x70	Ø 35	380
Orta Kol Lift Hortumu (2 Adet) / Hydraulic Side Link Cylinder Hose (2 Pcs.) **(Yukarıdaki liftlere dahildir** / It is included in the above**)**					

Yukarıdaki ölçülerin tamamı için kancalı ve ince kafalı modeller mevcuttur.

115500

Tek Yönlü Hidrolik Silindirler
Single Action Hydraulic Cylinder

Hidrolik Silindir Boru İç Çapı (mm)
Hydraulic Cylinder Tube Inner Diameter
Ø32, Ø35, Ø40, Ø45, Ø50, Ø60, Ø63, Ø65, Ø70, Ø75, Ø80, Ø85, Ø90, Ø100, Ø110, Ø120, Ø125, Ø130, Ø140, Ø150, Ø160

Hidrolik Silindir Rod Çapları (mm)
Hydraulic Cylinder Rod Diameter
Ø16, Ø18, Ø20, Ø25, Ø30, Ø35, Ø40, Ø45, Ø50, Ø55, Ø60, Ø65, Ø70, Ø75, Ø80, Ø85, Ø90, Ø95, Ø100

Order Number **Sipariş No**	Lift Type **Liftin Cinsi**	Tube Dia. mm **Boru Çapı mm**	Rod Dia. mm **Mil Çapı mm**	Hole Diameter mm **Delik Merkezi mm**	Capacity Kg **Kapasite Kg**
115511	**Orta KepçeLifti** Middle Cylinder for Dipper	63x75	Ø 40	780	2.500
115521	**Uzun Kepçe Lifti** Long Cylinder for Dipper	63x75	Ø 40	920	2.500
115531	**Saman Arabası Lifti** Cylinder for Straw Machine	63x75	Ø 40	1.250	2.500
115541	**İlaçlama Lifti 2 Kademeli** Cylinder for Spraying Machine (2 Stage)	63x75	Ø 30	1.380	5.600
115544	**İlaçlama Lifti 2 Kademeli** Cylinder for Spraying Machine (2 Stage)	63x75	Ø 30	900	5.600
115551	**Dingil Kaldırma Lifti** Cylinder for Axle Lifting	50x60	Ø 35	390	1.920
115561	**Gübre Serpme Lifti** Cylinder for Spreader	40x50	Ø 25	280	2.500

200 bar pompa basıncındaki değerlerdir.
The above values for 200 bar pumps.

116000

Hidrolik Lift Hortumu
Hydraulic Lift Hose

Order Number **Sipariş No**	Length **Boy (cm)**	Thickness **Kalınlık**	Left **Sol**	Right **Sağ**	Connector **Bağlantı**
116010	38	3/8-10 (mm)	9/16-5/8-3/4	3/4	**dişi+dişi** female+female
116015	50	3/8-10 (mm)	9/16-5/8-3/4	3/4	
116020	60	3/8-10 (mm)	9/16-5/8-3/4	3/4	
116025	120	3/8-10 (mm)	9/16-5/8-3/4	1/2 NPT	**dişi+erkek** female+male
116030	150	3/8-10 (mm)	9/16-5/8-3/4	1/2 NPT	
116035	180	3/8-10 (mm)	9/16-5/8-3/4	1/2 NPT	
116036	220	3/8-10 (mm)	9/16-5/8-3/4	1/2 NPT	
116040	250	3/8-10 (mm)	9/16-5/8-3/4	1/2 NPT	
116045	300	3/8-10 (mm)	9/16-5/8-3/4	1/2 NPT	
116046	350	3/8-10 (mm)	9/16-5/8-3/4	1/2 NPT	
116050	38	1/2-12 (mm)	3/4	3/4	**dişi+dişi** female+female
116055	50	1/2-12 (mm)	3/4	3/4	
116060	60	1/2-12 (mm)	3/4	3/4	
116065	120	1/2-12 (mm)	3/4	1/2 NPT	**dişi+erkek** female+male
116070	150	1/2-12 (mm)	3/4	1/2 NPT	
116075	180	1/2-12 (mm)	3/4	1/2 NPT	
116076	220	1/2-12 (mm)	3/4	1/2 NPT	
116077	200	1/2-12 (mm)	3/4	1/2 NPT	
116080	250	1/2-12 (mm)	3/4	1/2 NPT	
116090	300	1/2-12 (mm)	3/4	1/2 NPT	
116095	350	1/2-12 (mm)	3/4	1/2 NPT	

117000

Kumanda Kolu - 40 Lt.
Control Arm - 40 Lt.

Order Number **Sipariş No**	Arm Piece **Kol Sayısı**
117010	1
117021	2
117031	3
117041	4
117051	5
117061	6

80 Lt. Kumanda kolları için lütfen müşteri temsilcinizden fiyat alınız.
Please call our sales team to get detailed info for 80 Lt. control arm.

154645

Hidrolik Güç Ünitesi
Tipper Trailer Power Unit

Order Number **Sipariş No**	Type **Tip**
154647	**Hidrolik Güç Ünitesi Kumanda Butonu** Hydraulic Power Pack Control Button With Cable
154650	**12 V - 4 Lt. - 1,6 KW - 1,8 cc**
154660	**12 V - 12 Lt. - 1,6 KW - 1,8 cc**
154670	**24 V - 6 Lt. - 2 KW - 2,1 cc**
154680	**24 V - 12 Lt. - 2 KW - 2,1 cc**
154690	**24 V - Deposuz** / Without Oil Tank - 2 KW - 2,1 cc
154700	**24 V - Deposuz** / Without Oil Tank - 4,5 KW - 4,2 cc
154705	**24 V - 12 Lt. - 2KW - 2.1 cc - Çift Yönlü** / Double Action

Dişi Jak / *Female Jack*

Nipel / *Nipple 5/8"-1/2*

Rekor / *Racor*

T Rekor / *T Racor*

Erkek Jak / *Male Jack*

Nipel / *Nipple*

118000

Hidrolik Lift Ekipmanı
Hydraulic Lift Equipments

Order Number **Sipariş No**	Product Type **Ürün Cinsi**
118010	**Erkek Jak** / Male Jack
118015	**Erkek Jak** / Male Jack / Pimak
118020	**Dişi Jak** / Female Jack
118025	**Dişi Jak** / Female Jack / Pimak
118030	**3/4 Rekor** / Racor
118040	**5/8 Rekor**/ Racor
118050	**Nipel** / Nipple 3/4
118057	**Nipel** / Nipple 3/4 - 1/2
118052	**Nipel** / Nipple 3/4 - Te
118060	**Nipel** / Nipple 5/8
118067-1	**Nipel** / Nipple 5/8 - 1/2
118062-1	**Nipel** / Nipple 5/8 - Te

122200

Düz Kriko
Standard Jack

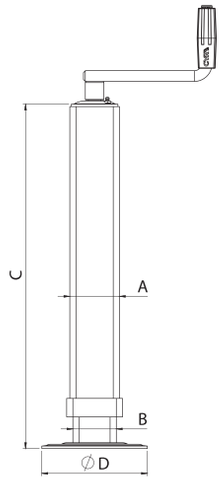

Order Number **Sipariş No**	Product Name **Ürün Adı**	Outer Profile (A) (mm) **Dış Profil (A) (mm)**	Inner Profile (B) (mm) **İç Profil (B) (mm)**	Closed Lenght (C) (mm) **Kapalı Boy (C) (mm)**	D (mm) **D (mm)**	Stroke (mm) **Strok (mm)**	Static Load (kg) **Statik Yük (kg)**	Capacity (Kg) **Kapasite (Kg)**
122211	**Römork Düz** Trailer Landing Leg	**80**	70	540	170	380	1.200	**5.000**
122221	**Tanker Düz** Tanker Landing Leg	**70**	60	460	170	320	1.000	**4.000**
122231	**Ekonomik Düz** Eco Landing Leg	**60**	50	460	170	320	800	**3.000**
122241	**Patoz Düz** Haymaker Landing Leg	**70**	60	900	170	520	1.000	**4.000**

122100

Ayarlı Kriko
Adjustable Jack

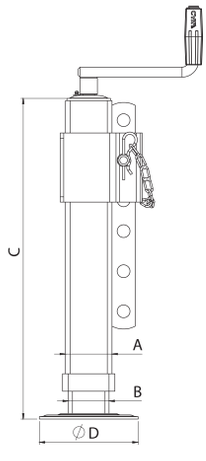

Order Number **Sipariş No**	Product Name **Ürün Adı**	Outer Profile (A) (mm) **Dış Profil (A) (mm)**	Inner Profile (B) (mm) **İç Profil (B) (mm)**	Closed Lenght (C) (mm) **Kapalı Boy (C) (mm)**	D (mm) **D (mm)**	Stroke (mm) **Strok (mm)**	Static Load (kg) **Statik Yük (kg)**	Capacity (Kg) **Kapasite (Kg)**
122111	**Römork Ayarlı** Adjustable Trailer Leg	**80**	70	540	170	380	1.200	**5.000**
122121	**Tanker Ayarlı** Adjustable Tanker Leg	**70**	60	460	170	320	1.000	**4.000**
122131	**Ekonomik Ayarlı** Adjustable ECO Leg	**60**	50	460	170	320	800	**3.000**
122141	**Patoz Ayarlı** Adjustable Haymaker Leg	**70**	60	900	170	520	1.000	**4.000**

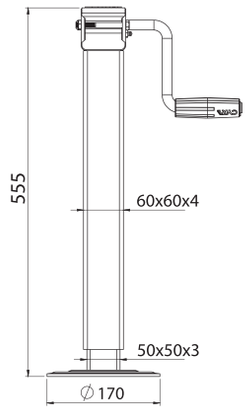

122330

Şanzımanlı Kriko / Hafif Tonaj

Low Tonnage Geared Jack

60x60 mm

Stroke **Strok**	Static Load (Kg) **Statik Yük (Kg)**	Capacity (Kg) **Kapasite (Kg)**
350	1.000	**4.000**

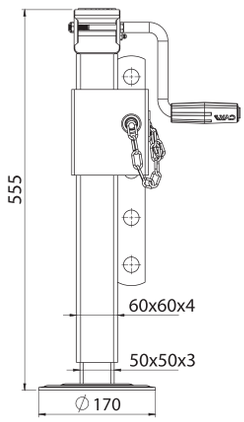

122331

Şanzımanlı Kriko - Ayarlı / Hafif Tonaj

Low Tonnage - Adjustable / Geared Jack

60x60 mm

Stroke **Strok**	Static Load (Kg) **Statik Yük (Kg)**	Capacity (Kg) **Kapasite (Kg)**
350	1.000	**4.000**

Model 1

Model 2

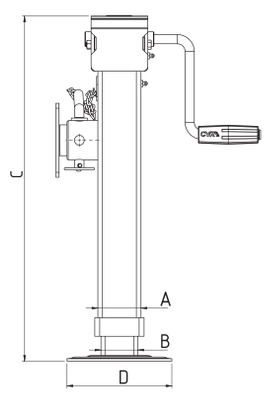

122335

Şanzımanlı Dönen Kriko

Geared Jack and Swivel

Order Number **Sipariş No**	Product Name **Ürün Adı**	Model **Model**	Outer Profile (A) (mm) **Dış Profil (A) (mm)**	Inner Profile (B) (mm) **İç Profil (B) (mm)**	Closed Lenght (C) (mm) **Kapalı Boy (C) (mm)**	D (mm) **D (mm)**	Stroke (mm) **Strok (mm)**	Static Load (kg) **Statik Yük (kg)**	Capacity (Kg) **Kapasite (Kg)**
122390	**Şanzımanlı Römork Krikosu Dönen Ø57** Geared Jack and Swivel Ø57	1	**Ø57**	Ø52	550	140	340	600	**2.500**
122335	**Dişlili Hafif Tonaj Dönen Kriko** Geared Jack and Swivel 60x60	1	**60**	50	550	170	350	1.000	**4.000**
122337	**Şanzımanlı Römork Krikosu Dönen 70x70mm** Geared Jack and Swivel 70x70	1	**70**	60	560	170	300	3.000	**9.000**
122339	**Şanzımanlı Römork Krikosu Dönen 80x80mm** Geared Jack and Swivel 80x80	1	**80**	70	635	200	380	4.000	**12.000**
122394	**Şanzımanlı Römork Krikosu Dönen Ø57** Geared Jack and Swivel Ø57	2	**Ø57**	Ø52	550	140	340	600	**2.500**
122338	**Şanzımanlı Römork Krikosu Dönen 70x70mm** Geared Jack and Swivel 70x70	2	**70**	60	560	170	300	3.000	**9.000**

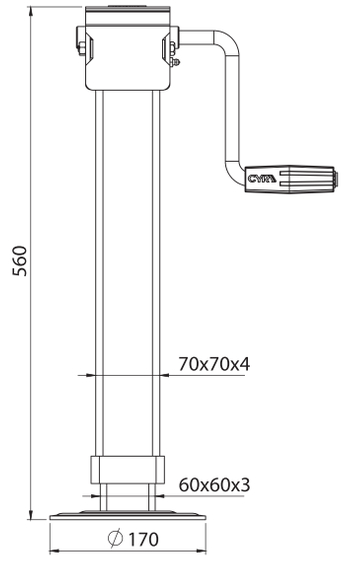

122305

Şanzımanlı Römork Krikosu Düz

Geared Parking Jack

70x70 mm

Stroke (mm) **Strok (mm)**	Static Load (Kg) **Statik Yük (Kg)**	Capacity (Kg) **Kapasite (Kg)**
300	3.000	**9.000**

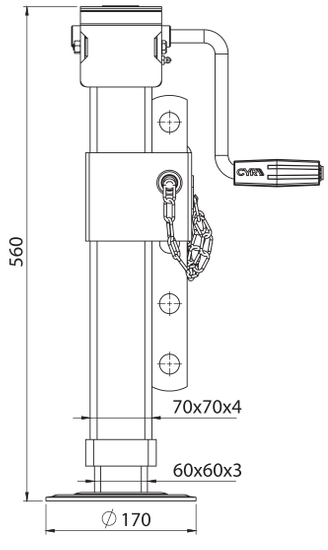

122308

Şanzımanlı Römork Krikosu Ayarlı

Geared Parking Jack Adjustable

70x70 mm

Stroke (mm) **Strok (mm)**	Static Load (Kg) **Statik Yük (Kg)**	Capacity (Kg) **Kapasite (Kg)**
300	3.000	**9.000**

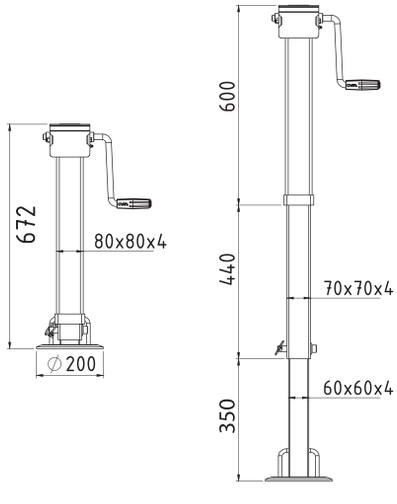

122314

Şanzımanlı Römork Krikosu Kademeli

Geared Parking Jack With Stage

80x80 mm

Stroke (mm) **Strok (mm)**	Static Load (Kg) **Statik Yük (Kg)**	Capacity (Kg) **Kapasite (Kg)**
380	2.500	**10.000**

122310

Şanzımanlı Römork Krikosu

Geared Parking Jack

80x80 mm

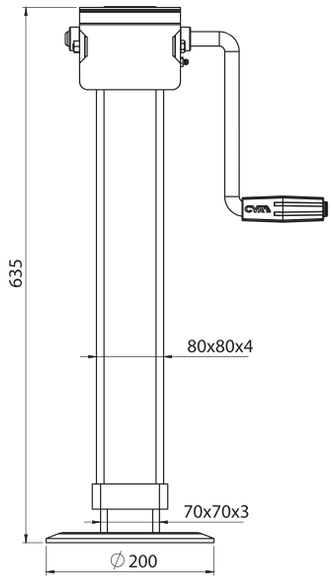

Stroke (mm) **Strok (mm)**	Static Load (Kg) **Statik Yük (Kg)**	Capacity (Kg) **Kapasite (Kg)**
380	4.000	**12.000**

122320

Şanzımanlı Ayarlı Römork Krikosu

Adjustable Geared Parking Jack

80x80 mm

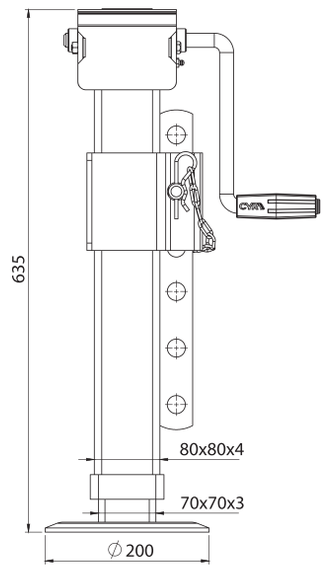

Stroke (mm) **Strok (mm)**	Static Load (Kg) **Statik Yük (Kg)**	Capacity (Kg) **Kapasite (Kg)**
380	4.000	**12.000**

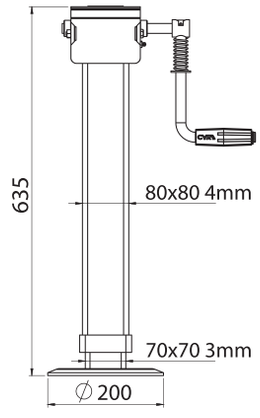

122312

Şanzımanlı Römork Krikosu / Özel Kol

Geared Parking Jack / Special Handle

80x80 mm

Stroke (mm) **Strok (mm)**	Static Load (Kg) **Statik Yük (Kg)**	Capacity (Kg) **Kapasite (Kg)**
380	4.000	**12.000**

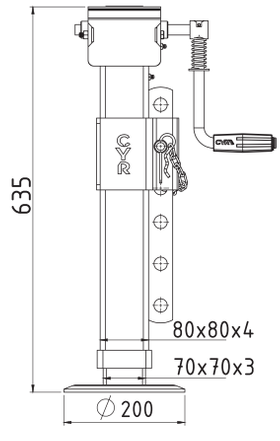

122322

Şanzımanlı Ayarlı Römork Krikosu / Özel Kol

Adjustable Geared Parking Jack / Special Handle

80x80 mm

Stroke (mm) **Strok (mm)**	Static Load (Kg) **Statik Yük (Kg)**	Capacity (Kg) **Kapasite (Kg)**
380	4.000	**12.000**

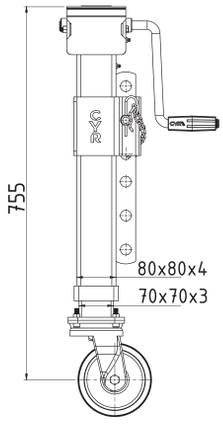

122321

Şanzımanlı Ayarlı Römork Krikosu Tekerli

Adjustable Geared Parking Jack With Wheel

80x80 mm

Stroke (mm) **Strok (mm)**	Static Load (Kg) **Statik Yük (Kg)**	Capacity (Kg) **Kapasite (Kg)**
380	4.000	**12.000**

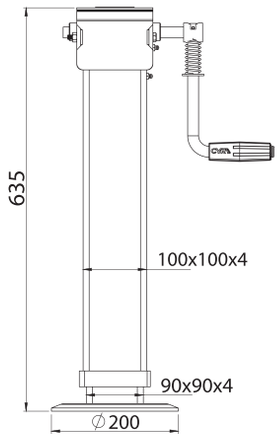

122327

Şanzımanlı Düz Römork Krikosu - Özel Kol

Geared Big Parking Jack - Special Handle

100x100 mm

Stroke (mm) **Strok (mm)**	Static Load (Kg) **Statik Yük (Kg)**	Capacity (Kg) **Kapasite (Kg)**
370	4.500	**15.000**

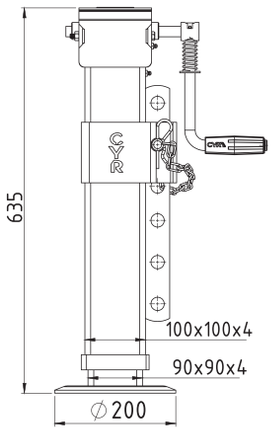

122326

Şanzımanlı Ayarlı Römork Krikosu - Özel Kol

Adjustable Geared Big Parking Jack - Special Handle

100x100 mm

Stroke (mm) **Strok (mm)**	Static Load (Kg) **Statik Yük (Kg)**	Capacity (Kg) **Kapasite (Kg)**
370	4.500	**15.000**

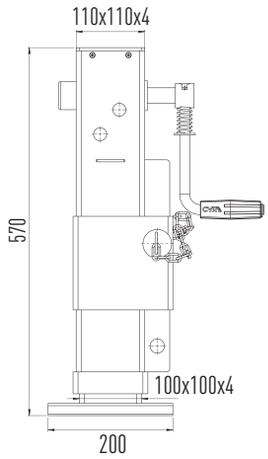

122340

Şanzımanlı Ayarlı Römork Krikosu

Parking Jack Semi Automated Turnover and Pin Locking

110x110 mm

Stroke **Strok**	Static Load (Kg) **Statik Yük (Kg)**	Capacity (Kg) **Kapasite (Kg)**
250	4.500	**18.000**

122350

Şanzımanlı Römork Krikosu / Ağır Tonaj

Geared Parking Jack / Heavy Tonnage

110x110 mm

Stroke (mm) **Strok (mm)**	Static Load **Statik Yük**	Capacity (Kg) **Kapasite (Kg)**
340	4.500	**18.000**

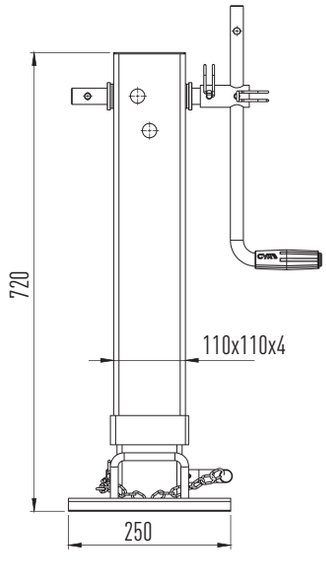

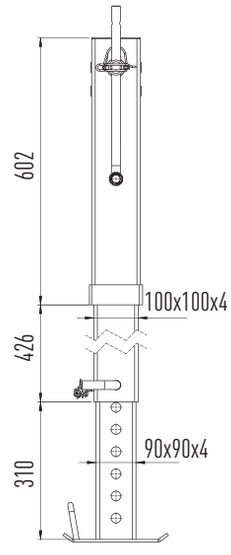

122360

Şanzımanlı Römork Krikosu / Ağır Tonaj - Vitesli Model

Three Stage Landing Gear For Tandem Trailers With Double Speed

110x110 mm

Stroke (mm) **Strok (mm)**	Static Load **Statik Yük**	Capacity (Kg) **Kapasite (Kg)**
400	10.000	**30.000**

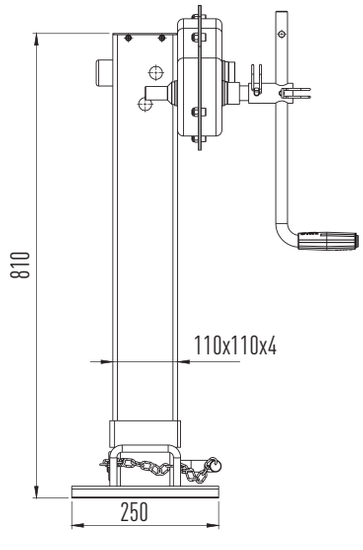

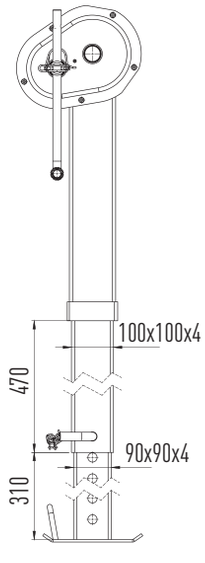

122440

Hidrolik Kriko
Hydraulic Jack

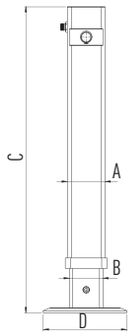

Order Number **Sipariş No**	Bar	A	B	C	D	Stroke (mm) **Strok (mm)**	R	Static Load (Kg) **Statik Yük (Kg)**	Capacity (Kg) **Kapasite (Kg)**
122442	100	**90**	80	680	200	450	3/8"	2.000	**7.500**
122444	100	**100**	90	830	200	540	3/8"	2.800	**10.000**
122445	100	**110**	100	830	200	540	3/8"	3.900	**15.000**

İçten Kilitli -Küçük / *Inner Lock Small*

Maksimum çalışma basıncı 200 bar
Maximum working pressure 200 bar

122446

Hidrolik Kriko Ø
Hydraulic Jack

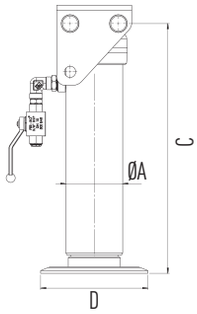

Order Number **Sipariş No**	Bar	ØA	C	D	Stroke (mm) **Strok (mm)**	R	Static Load (Kg) **Statik Yük (Kg)**	Capacity (Kg) **Kapasite (Kg)**
122446	100	**Ø105**	455	200	300	3/8"	5.000	**12.000**
122448	100	**Ø90**	435	170	280	3/8"	3.000	**8.000**

Maksimum çalışma basıncı 200 bar
Maximum working pressure 200 bar

122441

Hidrolik Kriko (Dıştan Kilit) - Kademeli
Hydraulic Jack (Outer Lock) - With Stage

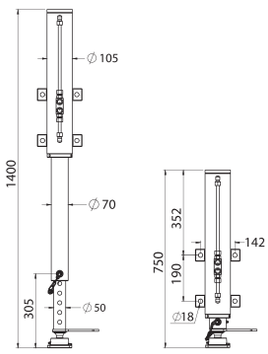

Order Number **Sipariş No**	Stroke (mm) **Strok (mm)**	Static Load (Kg) **Statik Yük (Kg)**	Capacity (Kg) **Kapasite (Kg)**
122441	500	7.000	**20.000**

Maksimum çalışma basıncı 200 bar
Maximum working pressure 200 bar

122460

Hidrolik Kriko (Dıştan Kilit) - Dik
Hydraulic Jack (Outer Lock) - Horizontal

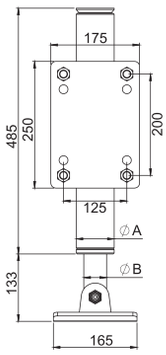

Order Number **Sipariş No**	A	B	Stroke (mm) **Strok (mm)**	Static Load (Kg) **Statik Yük (Kg)**	Capacity (Kg) **Kapasite (Kg)**
122460	**Ø75**	Ø45	380	3.100	**10.000**
122461	**Ø95**	Ø55	365	5.500	**18.000**

Maksimum çalışma basıncı 200 bar
Maximum working pressure 200 bar

122480

Hidrolik Kriko (Dıştan Kilit) - Yatay
Hydraulic Jack (Outer Lock) - Vertical

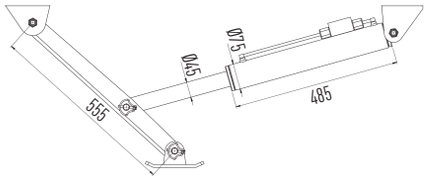

Stroke (mm) **Strok (mm)**	Static Load **Statik Yük**	Capacity (Kg) **Kapasite (Kg)**
380	3.100	**10.000**

122700

Tekerli Kriko - Sabit
Wheeled Jack - Fixed

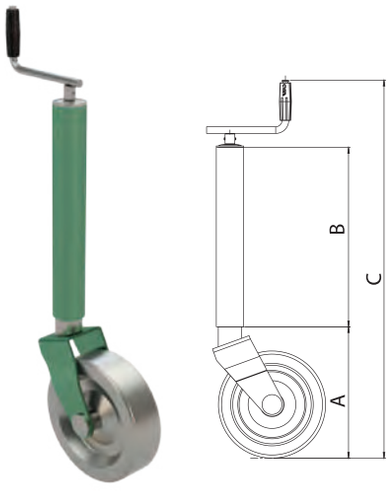

Düz / Standard

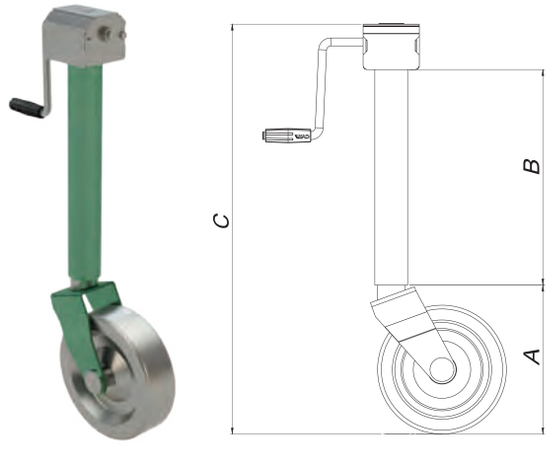

Şanzımanlı / Geared

Order Number **Sipariş No**	Type **Tip**	mm	mm	Stroke **Strok**	Metal	Plastik/**Plastic**	Static Load **Statik Yük**	Capacity (Kg) **Kapasite (Kg)**	A (mm) **A (mm)**	B (mm) **B (mm)**	C (mm) **C (mm)**
122704	**Düz**/Standard	60	-	300	250X60		850	4.000	295	400	860
122706	**Düz**/Standard	-	60	300	250X60		850	4.000	295	400	860
122708	**Düz**/Standard	70	-	300	275x80	-	1,000	5.000	310	400	875
122710	**Şanzımanlı**/Geared	70	-	285	275x80	-	1,000	6.000	310	400	810

122720

Tekerli Kriko - Katlanır - Pimli
Wheeled Jack - Folding - With Pin

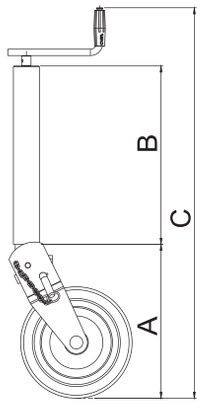

Order Number **Sipariş No**	mm	mm	Stroke **Strok**	Metal	Plastik/**Plastic**	Static Load **Statik Yük**	Capacity (Kg) **Kapasite (Kg)**	A (mm) **A (mm)**	B (mm) **B (mm)**	C (mm) **C (mm)**
122726	70	-	300		250x70	800	2.500	360	450	965
122728	70	-	300	275x80	-	1.000	5.000	390	450	1.020
122730	70	-	300	300x90	-	1.200	6.000	400	480	1.060

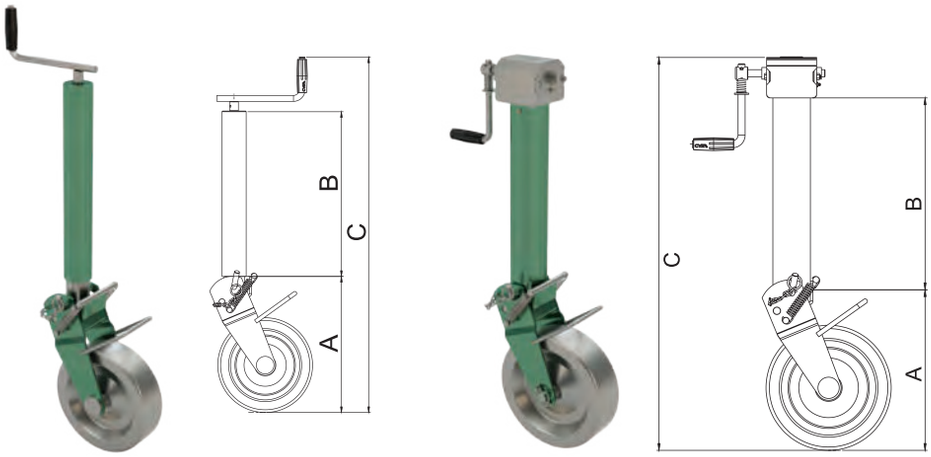

Düz / Standard

Şanzımanlı / Geared

122740

Tekerli Kriko - Katlanır - Yaylı

Wheeled Jack - F olding - With Spring

Order Number **Sipariş No**	Type **Tip**	mm	mm	Stroke **Strok**	Metal	Plastik/**Plastic**	Static Load **Statik Yük**	Capacity (Kg) **Kapasite (Kg)**	A (mm) **A (mm)**	B (mm) **B (mm)**	C (mm) **C (mm)**
122746	**Düz**/Standard	60		285	250x60	-	900	3.500	360	400	930
122748	**Düz**/Standard		60	285	250x60	-	900	3.500	360	400	920
122750	**Düz**/Standard	70	-	300	275x80	-	1.000	5.000	375	470	1.010
122752	**Düz**/Standard	-	70	300	275x80	-	1.000	5.000	375	470	1.000
122754	**Düz**/Standard	-	80	380	300x90	-	1.400	6.000	390	470	1.020
122756	**Şanzımanlı**/Geared	-	80	380	300X90	-	2.000	7.000	390	470	960
122758	**Şanzımanlı**/Geared	90	-	380	300X90	-	2.000	8.000	390	500	990

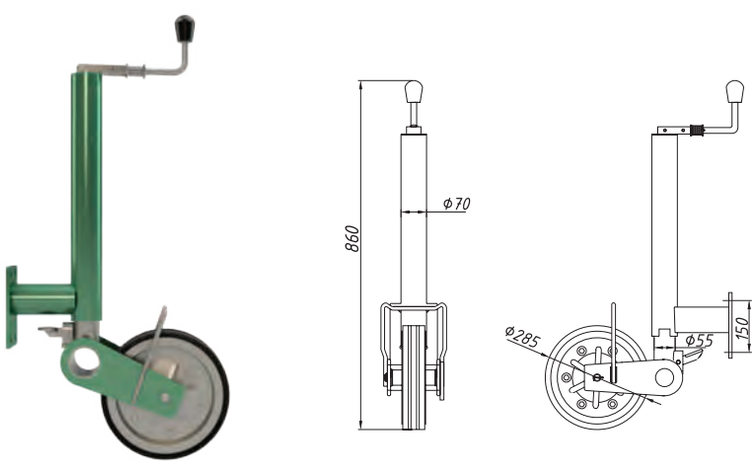

122400

Kriko - Ø Ağır Tonaj Tekerli

Heavy Tonnage Jack

Stroke **Strok**	Static Load (Kg) **Statik Yük (Kg)**	Capacity (Kg) **Kapasite (Kg)**
360	800	**3.000**

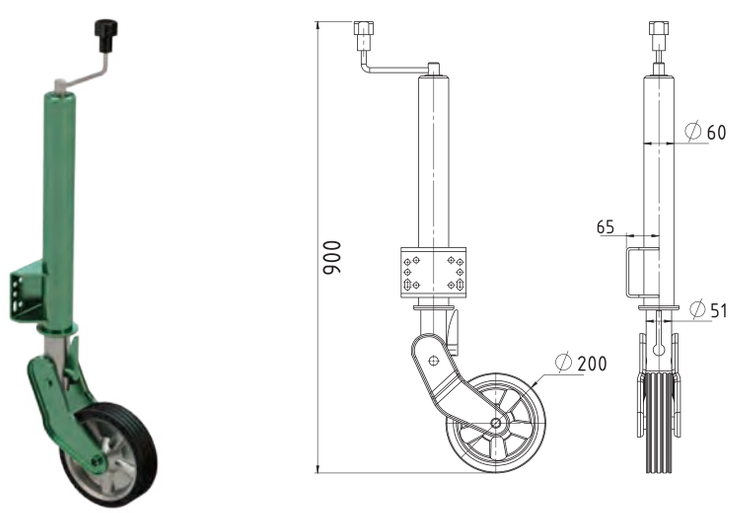

122405

Kriko Katlanır Tekerli

Folding Jack

Stroke **Strok**	Static Load (Kg) **Statik Yük (Kg)**	Capacity (Kg) **Kapasite (Kg)**
280 mm	500	**2.500**

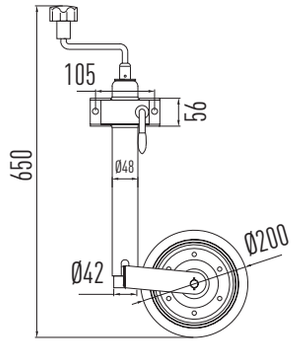

122370

Kriko - Ø Küçük Plastik Tekerli

Small Jack - With Rubber Wheel

Stroke **Strok**	Static Load (Kg) **Statik Yük (Kg)**	Capacity (Kg) **Kapasite (Kg)**
230	150	**650**

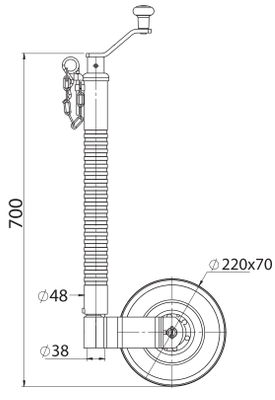

122373

Kriko - Küçük Boru Tekerli - Nervürlü - Kilitleme Pimli

Small Ribbed Jockey - Wheel - With Locking Pin

Stroke **Strok**	Static Load (Kg) **Statik Yük (Kg)**	Capacity (Kg) **Kapasite (Kg)**
240	200	**800**

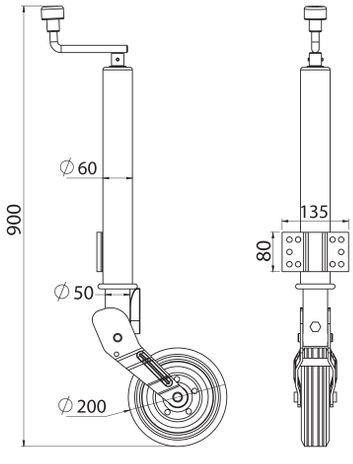

122375

Kriko - Katlanır - Ø Orta Plastik Tekerli

Middle Size Jack - Folding - With Rubber Wheel

Stroke **Strok**	Static Load (Kg) **Statik Yük (Kg)**	Capacity (Kg) **Kapasite (Kg)**
300	200	**800**

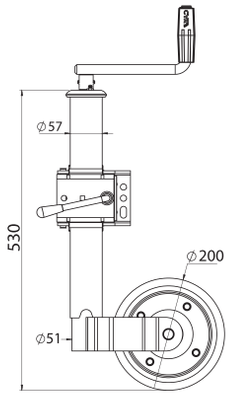

122380

Kriko - Ø Büyük Plastik Tekerli

Big Size Jack - With Rubber Wheel

Stroke **Strok**	Static Load (Kg) **Statik Yük (Kg)**	Capacity (Kg) **Kapasite (Kg)**
300	250	**950**

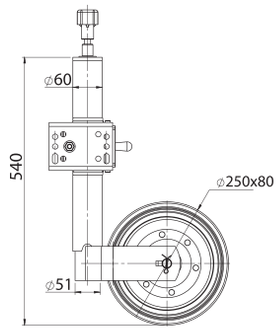

122382

Kriko - Ø Plastik Tekerli Kelepçeli

Rubber Wheel Jack With Clamp

Stroke **Strok**	Static Load (Kg) **Statik Yük (Kg)**	Capacity (Kg) **Kapasite (Kg)**
240	500	**1.800**

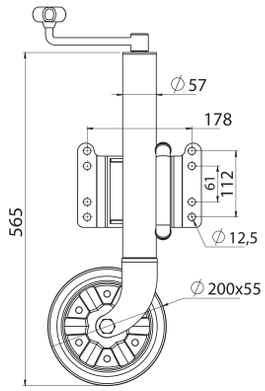

122385

Kriko - Ø Plastik Tekerli Dönen Aparatlı

Swivel Rubber Wheel Jack

Stroke **Strok**	Static Load (Kg) **Statik Yük (Kg)**	Capacity (Kg) **Kapasite (Kg)**
270	350	**1.000**

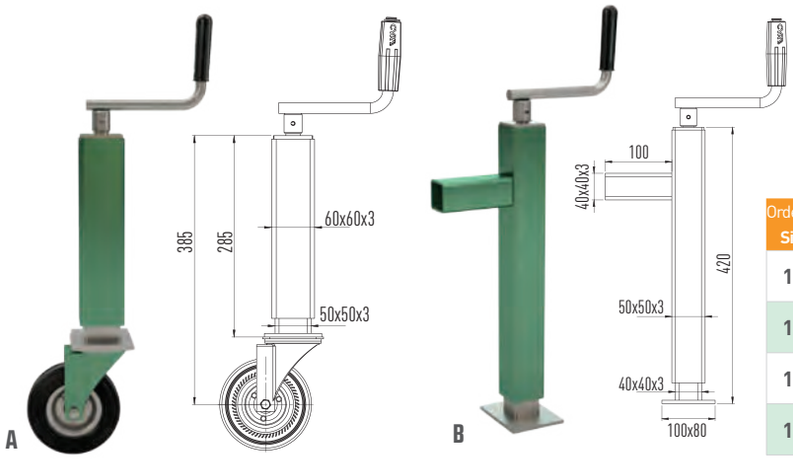

122420

Profil Küçük Kriko

Small Jack From Profile

Order Number **Sipariş No**	Type **Tip**	Model **Model**	Stroke (mm) **Stroke (mm)**	Static Load (kg) **Statik Yük (kg)**	Capacity (Kg) **Kapasite (Kg)**
122420	**Tekerli** With Wheel	A	200	400	**1.600**
122430	**Tekersiz** Without Wheel	A	200	500	**2.000**
122433	**Yandan Profilli** With Side Profile	B	320	400	**1.600**
122434	**Yandan Profilsiz** Without Side Profile	B	320	400	**1.600**

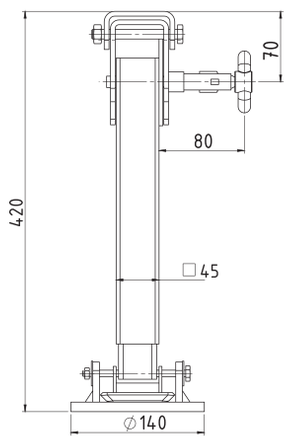

122438

Katlanabilir Destek Ayağı

Folding Support Leg

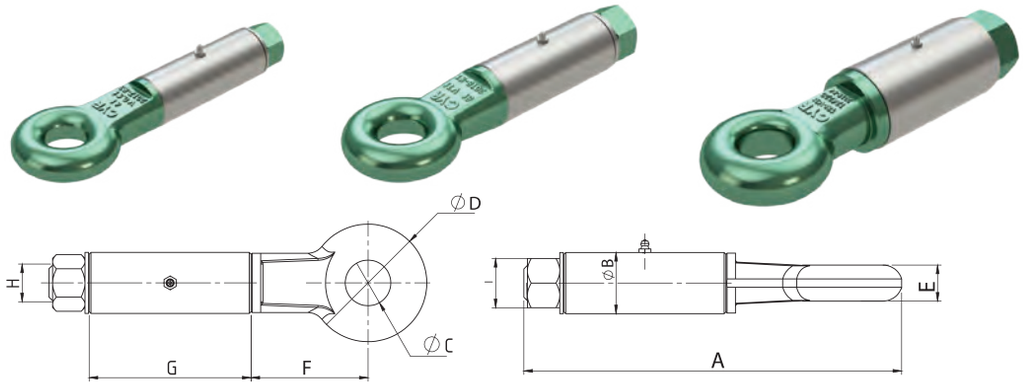

124190

Ok Başı Dereceli

Towing Eye With Tube

Order Number / Sipariş No	Static Load (Kg) / Statik Yük (Kg)	A	ØB	ØC	ØD	E	F	G	H	I	Capacity (kg) / Kapasite (kg)
		Dimensions / Ölçüler (mm)									
124195	250	280	42	30	85	26	97	110	M24	36	3.000
124200	500	315	51	38	98	30	97	135	M30	41	6.000
124215	1.500	330	60	42	105	33	100	140	M36	50	8.000
124210	1.500	336	63	42	110	35	104	140	M36	50	10.000
(E) 124211	1.500	336	63	42	110	35	104	140	M36	50	106 kN
E-Belgeli / *E-Certificated*	E13*55R01/07*4678*00										
124220	3.000	364	83	50	120	40	100	145	M42	65	18.000
(E) 124225	3.000	364	83	50	120	40	100	145	M42	65	140 kN
E-Belgeli / *E-Certificated*	E11*55R01/06*1132800										

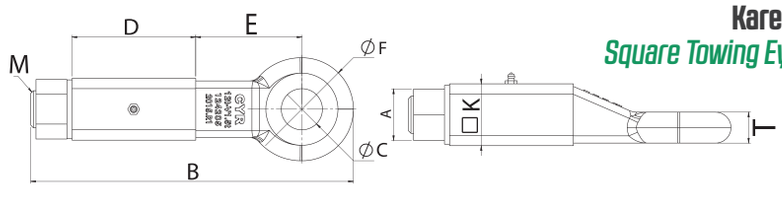

124204

Kare Yataklı Ok Başı

Square Towing Eye With Bedding

Order Number / Sipariş No	Product Type / Ürün Cinsi	Length-B (mm) / Boy-B (mm)	Hole Dia.-C (mm) / Delik Çapı-C (mm)	D (mm)	E (mm)	F (mm)	□ K (mm)	T (mm)	A (mm)	Thread (M) / Yiv Ölçüsü (M)	Static Load (Kg) / Statik Yük (Kg)	Capacity (Kg) / Kapasite (Kg)
124205	**Kare Yataklı Ok Başı - Orta** Middle Square Towing Eye With Bedding	315	40	120	103	100	60	30	50	M36	1.500	10.000
124206	**Kare Yataklı Ok Başı - Büyük** Big Square Towing Eye With Bedding	353	42	145	108	110	80	36	65	M42	2.750	15.000

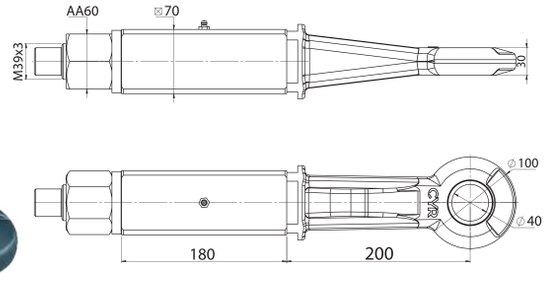

124207

Ok Başı H Tipi - Oluklu 70 mm Kare Yataklı

Towing Eye H Type - Grooved 70 mm With Bedding

Static Load (Kg) / Statik Yük (Kg)	Capacity (Kg) / Kapasite (Kg)
1.500	15.000

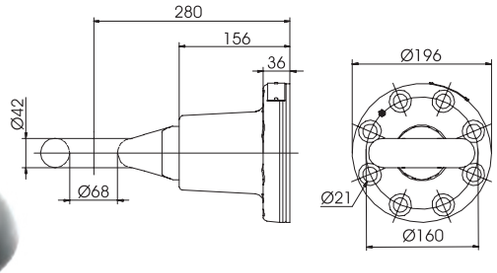

124212

Ok Başı Flanşlı Dorse - E Belgeli

Flanged Drawbar Eye - e Certificated

Static Load (Kg) / Statik Yük (Kg)	Capacity / Kapasite	Certificate No / Belge No
1.000	200 kN	E11*55R01/8428

(E)

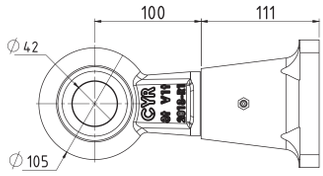

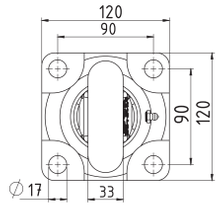

124240

Ok Başı Flanşlı Küçük Model
Towing Eye With Flange / Small Model

Bolt **Civata**	Tightening Torque (Nm) **Sıkma Torku (Nm)**	Static Load (Kg) **Statik Yük (Kg)**	Capacity (Kg) **Kapasite (Kg)**
M16-12.9	320-340	1.500	**8.000**

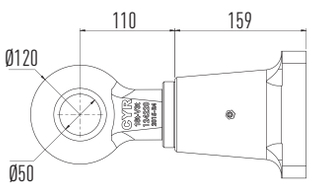

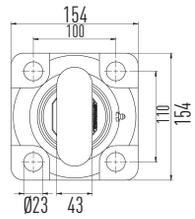

124250

Ok Başı Flanşlı Orta Model
Towing Eye With Flange / Middle Model

Order Number **Sipariş No**	Bolt **Civata**	Tightening Torque (Nm) **Sıkma Torku (Nm)**	Static Load (Kg) **Statik Yük (Kg)**	Capacity (Kg) **Kapasite (Kg)**	Certificate No **Belge No**
124250	M22-12.9	880-900	3.000	18.000	Standart
124255	M22-12.9	880-900	3.000	125 kN	E13*55R01/07*4679*00

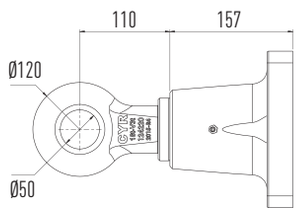

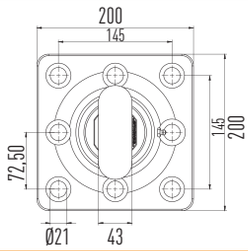

124260

Ok Başı Flanşlı Büyük Model
Towing Eye With Flange / Big Model

Order Number **Sipariş No**	Bolt **Civata**	Tightening Torque (Nm) **Sıkma Torku (Nm)**	Static Load (Kg) **Statik Yük (Kg)**	Capacity (Kg) **Kapasite (Kg)**	Certificate No **Belge No**
124260	M20-12.9	650-670	3.000	24.000	Standart
124265	M20-12.9	650-670	3.000	152 kN	E13*55R01/07*4680*00

124240-1

Flanşlı Ok Başı Montaj Flanşı
Plate For Flanged Towing Eye

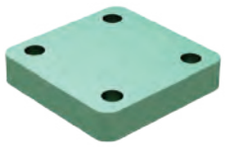

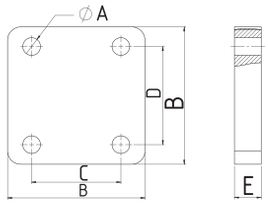

Order Number **Sipariş No**	Type **Tip**	Hole Diameter **Ø A (mm)**	B (mm)	C (mm)	D (mm)	E (mm)
124240-1	**Küçük** Small	M16x2	120	90	90	20
124250-1	**Orta** Middle	M22x2,5	154	100	110	30

124240-2

Flanşlı Ok Başı Montaj Flanşı Ayarlanabilir
Plate For Flanged Towing Eye

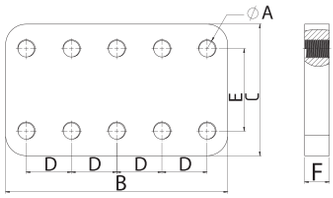

Order Number **Sipariş No**	Type **Tip**	Hole Diameter **Ø A (mm)**	B (mm)	C (mm)	D (mm)	E (mm)	F (mm)
124240-2	**Küçük** Small	M16x2	220	130	45	90	20
124250-2	**Orta** Middle	M22x2,5	270	160	55	100	30

124260-1

Montaj Flanşı Büyük Model
Plate For Flanged Big Model

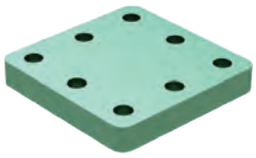

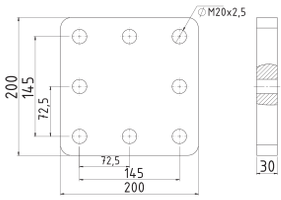

124260-2

Montaj Flanşı Ayarlanabilir Büyük Model
Plate For Flanged Big Model Adjustable

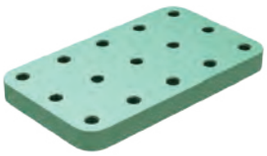

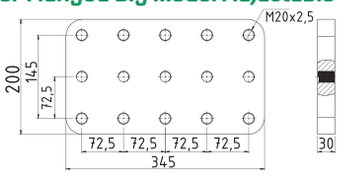

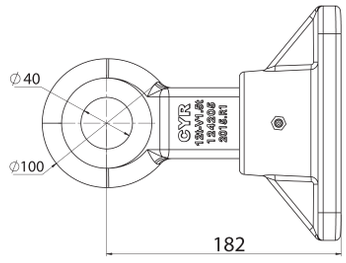

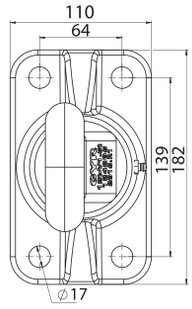

124239

Ok Başı Flanşlı Mibzer Model

Towing Eye With Flange / For Grain Drill

Static Load (Kg) Statik Yük (Kg)	Capacity (Kg) Kapasite (Kg)
1.500	**7.500**

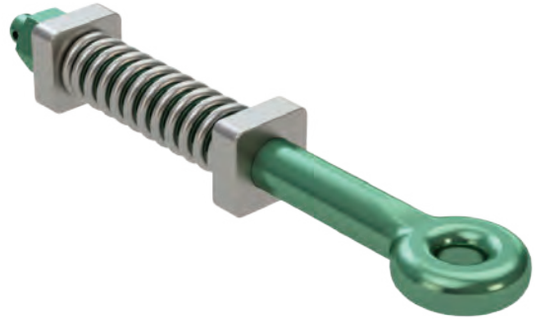

124300

İşlenmiş Ok Başı Takım

Machined Towing Eye Set

Order Number Sipariş No	Thickness-A Kalınlık-A	Capacity (Kg) Kapasite (Kg)
124310	45 mm	**6.500**
124320	50 mm	**7.500**
124330	55 mm	**8.500**
124505	55 mm	**3.500**

Nato Tip / *Nato Type*

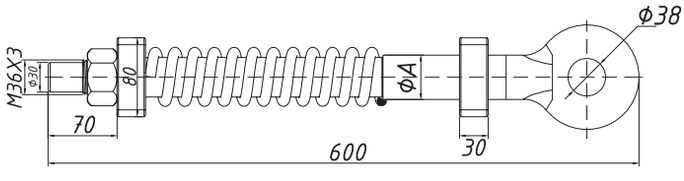

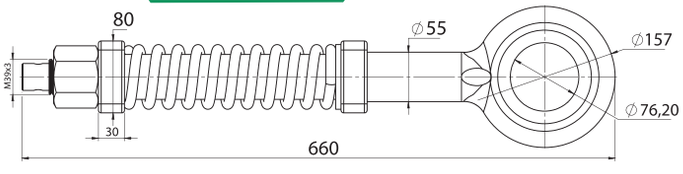

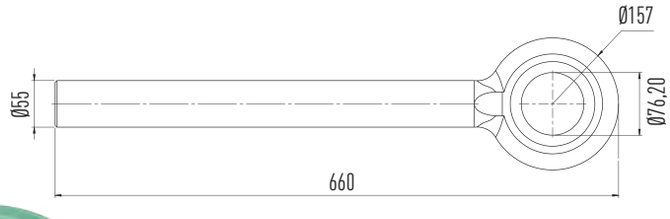

124500

Nato Tipi Ok Başı

Nato Type Towing Eye

Static Load (Kg) Statik Yük (Kg)	Capacity (Kg) Kapasite (Kg)
150	**3.500**

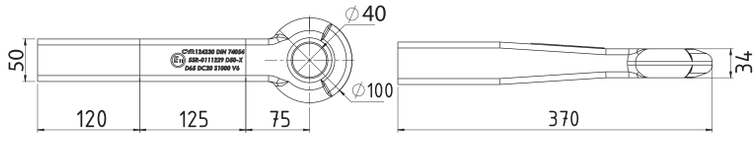

124230

Kare Ok Başı

Square Towing Eye

Order Number Sipariş No	Static Load (Kg) Statik Yük (Kg)	Capacity (Kg) Kapasite (Kg)	Certificate No Belge No
124230	1.000	65 kN	E11*55R0111229
124232	1.000	7.000	**Standart**/Standard

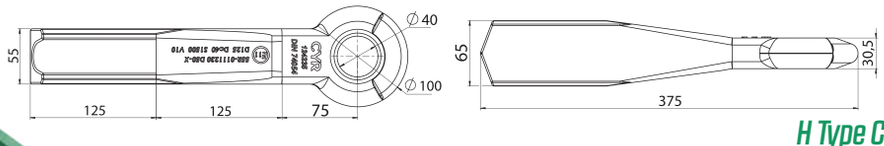

124235

H Tipi Oluklu Ok Başı

H Type Corrugated Towing Eye

Order Number Sipariş No	Static Load (Kg) Statik Yük (Kg)	Capacity (Kg) Kapasite (Kg)	Certificate No Belge No
124235	1.500	125 kN	E11*55R01111230
124237	1.500	15.000	**Standart**/Standard

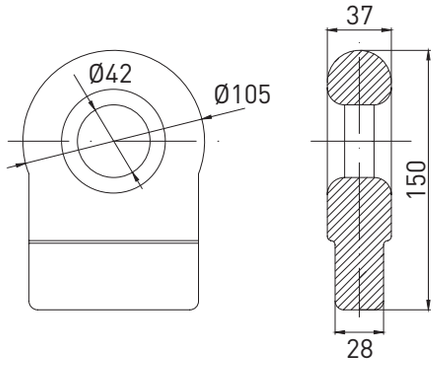

124700

Tanker Çeki Dövme

Forged Drawbolt For Tanker

Static Load (Kg) **Statik Yük (Kg)**	Capacity (Kg) **Kapasite (Kg)**
1.800	12.000

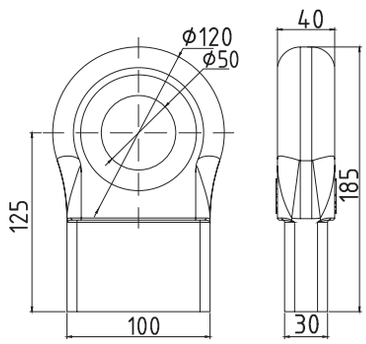

124800

Römork Çeki Dövme

Forged Drawbolt for Trailer

Static Load (Kg) **Statik Yük (Kg)**	Capacity (Kg) **Kapasite (Kg)**
3.000	20.000

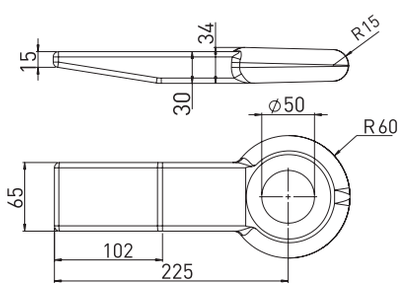

124810

Küçük Özel Çeki

Special Small Drawbolt

Static Load (Kg) **Statik Yük (Kg)**	Capacity (Kg) **Kapasite (Kg)**
1.200	8.000

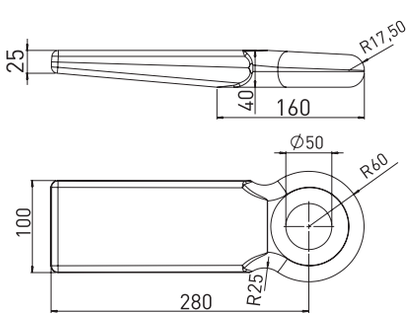

124815

Büyük Özel Çeki

Special Big Drawbolt

Static Load (Kg) **Statik Yük (Kg)**	Capacity (Kg) **Kapasite (Kg)**
3.000	25.000

124900

Hazır Ok

Towing Eye Set

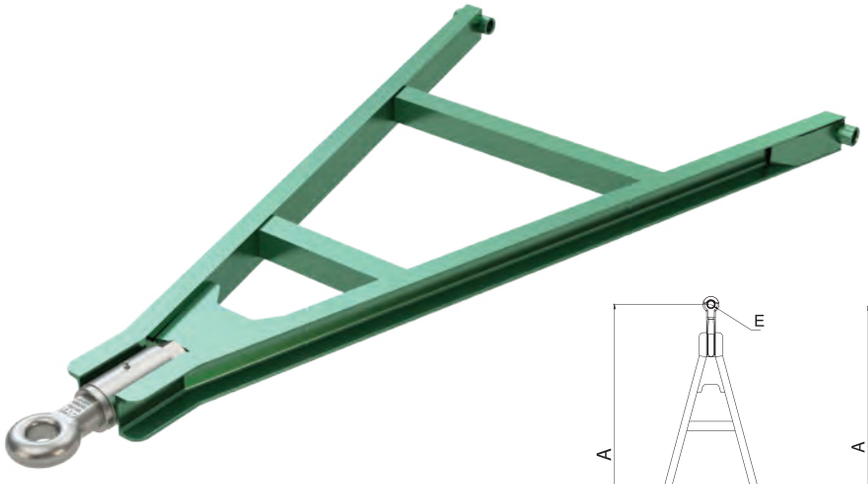

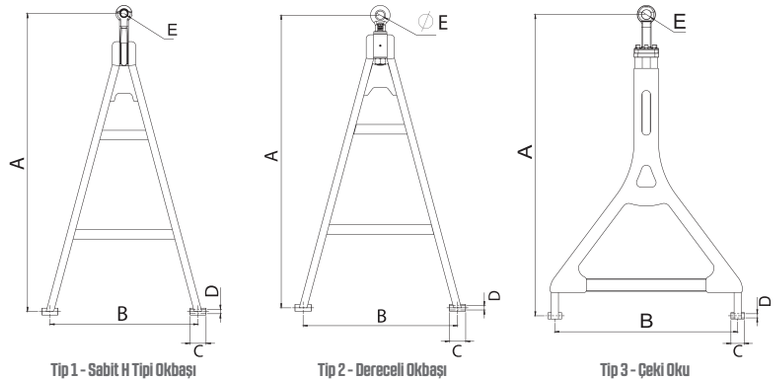

Tip 1 - Sabit H Tipi Okbaşı
Type 1 - Fixed H Type Towing Eye

Tip 2 - Dereceli Okbaşı
Type 2 - Towing Eye With Tube

Tip 3 - Çeki Oku
Type 3 - Drawbar Eye

Order Number **Sipariş No**	Type **Tip**	D (kN)	Static (t) Statik (t)	Capacity (t) **Kapasite (t)**	**ECE.R15**	A **Min**	A **Max**	B **Min**	B **Max**	C **Min**	C **Max**	D **Min**	D **Max**	**E**	Profile **Profil**
124900	1	125 kN	10	27	E11*55R 01/06*11327*00	1.800	2.100	950	1.300	60	100	26	30	40	U 80
124909	2	125 kN	10	27	E11*55R 01/06*11327*00	1.800	2.100	950	1.300	60	100	26	30	50	U 80
124903	1	-	6	15	-	1.800	2.100	950	1.300	60	100	22	30	40	U 65
124907	1	-	10	27	-	1.800	2.100	950	1.300	60	100	26	30	40	U 80
124908	2	-	10	27	-	1.800	2.100	950	1.300	60	100	26	30	50	U 80
124906	2	-	8	15	-	1.800	2.100	950	1.300	60	100	26	30	42	U 80
124910	3	-	15	36	-	1.800	2.100	950	1.300	60	100	26	30	50	U 80

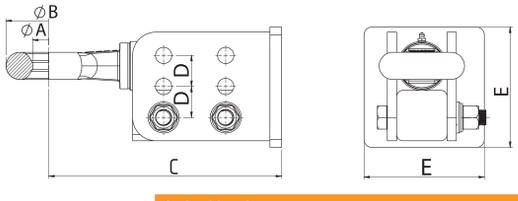

124231

Ok Başı Kademeli - Dereceli

Staged Towing Eye

Order Number **Sipariş No**	**Ø A**	**Ø B**	**C**	**D**	**E**	Static Load (Kg) **Statik Yük (Kg)**	Capacity (Kg) **Kapasite (Kg)**
124231	42	110	300	40	155	1.500	10.000
124233	50	120	325	50	155	3.000	18.000

124901

Hazır Ok V Tipi

Towing Eye Set V Type

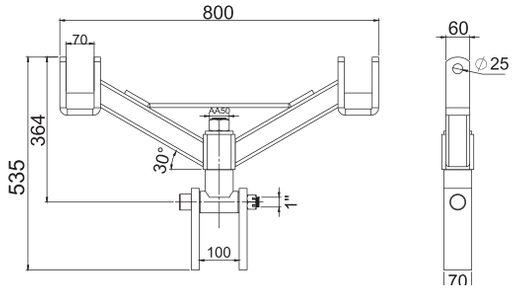

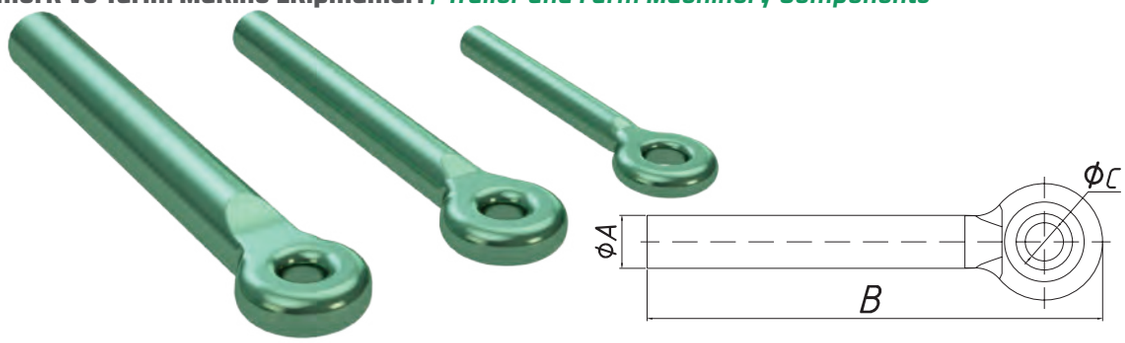

123000

Ok Başı
Towing Eye

Order Number **Sipariş No**	Thickness-A (mm) **Kalınlık-A (mm)**	Length-B (mm) **Boy-B (mm)**	Hole Dia.-C (mm) **Delik Çapı-C (mm)**	Capacity (Kg) **Kapasite (Kg)**
123010	35	330	38	2.000
123020	35	500	38	2.250
123030	35	600	38	2.500
123040	40	330	38	3.500
123050	40	500	38	4.000
123060	40	600	38	4.500
123070	45	330	38	5.500
123080	45	500	38	6.000
123090	45	600	38	6.500
123100	50	330	38	7.000
123110	50	500	38	7.250
123120	50	600	38	7.500

Order Number **Sipariş No**	Thickness-A (mm) **Kalınlık-A (mm)**	Length-B (mm) **Boy-B (mm)**	Hole Dia.-C (mm) **Delik Çapı-C (mm)**	Capacity (Kg) **Kapasite (Kg)**
123130	55	330	38	8.000
123140	55	500	38	8.250
123150	55	600	38	8.500
123160	60	330	38	8.750
123170	60	500	38	9.000
123180	60	600	38	9.250
123190	65	330	38	9.500
123200	65	500	38	9.750
123210	65	600	38	10.000

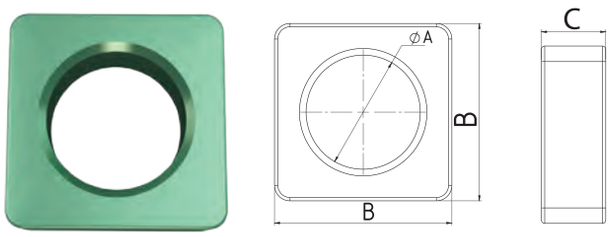

124880

Ok Başı Yatağı
Ring for Towing Eye

Order Number **Sipariş No**	Hole Diameter-A (mm) **Delik Çapı-A (mm)**	**B (mm)**	**C (mm)**
124881	37	80	29
124882	42	80	29
124883	47	80	29
124884	52	80	29
124885	57	80	29

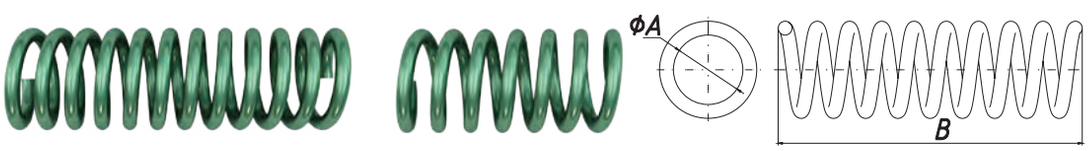

124840

Okbaşı Yayı
Towing Eye Spring

Order Number **Sipariş No**	Length-B (mm) **Uzunluk-B (mm)**	Hole Diameter-A (mm) **Delik Çapı-A (mm)**
124841	250	37
124842	150	37
124843	250	42
124844	150	42
124845	250	47
124846	150	47

Order Number **Sipariş No**	Length-B (mm) **Uzunluk-B (mm)**	Hole Diameter-A (mm) **Delik Çapı-A (mm)**
124847	250	52
124848	150	52
124849	250	57
124850	150	57
124860	**Kepçe Yayı** / Dipper Spring	**Kısa** / Short
124865	**Kepçe Yayı** / Dipper Spring	**Uzun** / Long

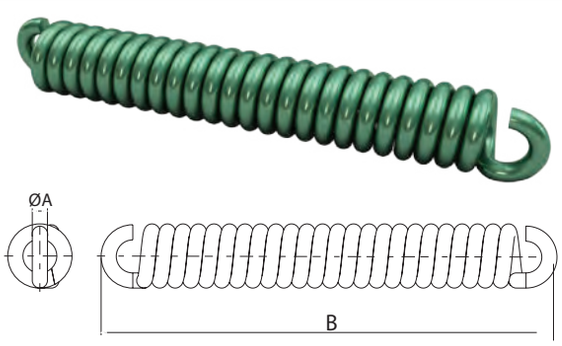

125000

Ok Kaldırma ve Kültivatör Yayı
Towing Eye Holder Spring and Cultivator Spring

Order Number **Sipariş No**	Thickness-A (mm) **Kalınlık-A (mm)**	Length-B (mm) **Uzunluk-B (mm)**	Winding Number **Sarım Sayısı**
125010	8	250	23
125020	10	320	26
125030	11,5	335	23
125040	12	340	23
125050	13	340	21
125060	14	340	19

115350

Üç Yana Devirme Topuzu

Tipping Ball Bearing

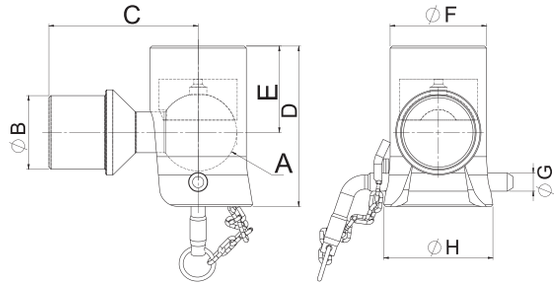

Order Number Sipariş No	A	B	C	D	E	F	G	H
115351	43	42	78	95	42	63	16	70
115352	58	62	124	123	58	76	18	88
115353	76	72	147	158	84,5	95	18	107
115354	98	82.5	179	193	110	127	20	143

115340

Üç Yana Devirme Yatağı

Tipping Bearing

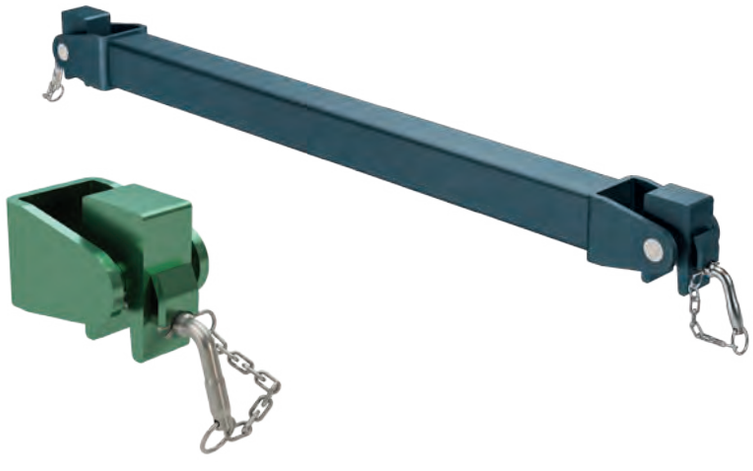

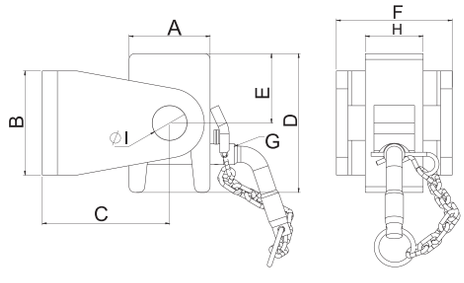

Order Number Sipariş No	A	B	C	D	E	F	G	H	I
115341	50	60	80	80	45	60	16	35	18
115342	60	80	100	100	55	80	18	50	22
115343	70	90	110	120	60	100	18	50	30
115344	80	100	120	130	65	130	20	70	38

115300

3 Yana Devirme Sistemi - Set Yargılı / Yargısız

Three-way Dumping Kit - Set

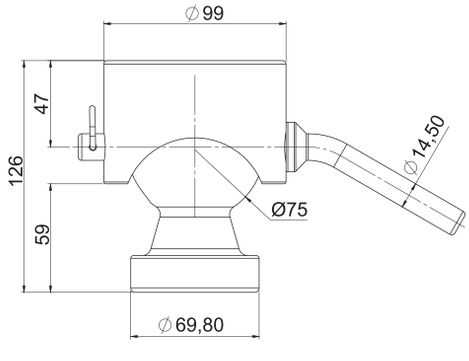

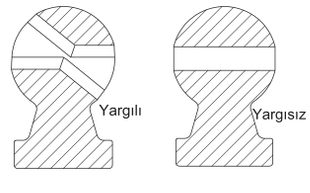

170400

Menteşeli Kilit
Hinge

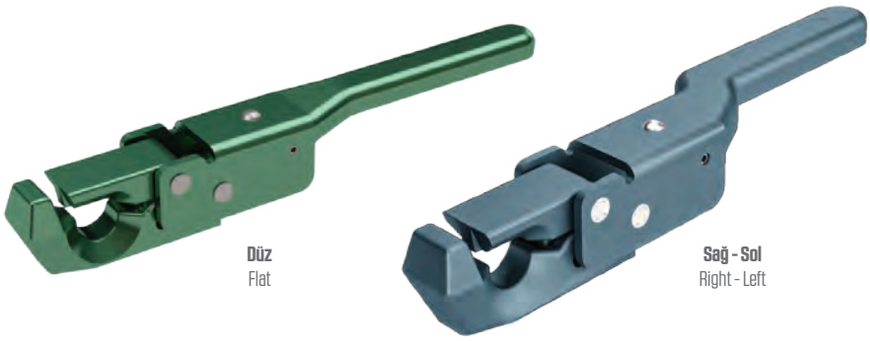

Düz
Flat

Sağ - Sol
Right - Left

Pim
Pim

Order Number **Sipariş No**	Type **Tip**
170403	**Düz** / Flat
170401	**Sağ** / Right
170402	**Sol** / Left
170404	**Menteşeli Kilit Pimi** / Hinged Lock Pim

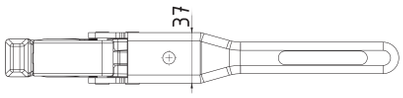

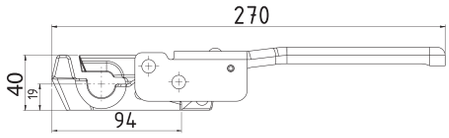

170405

Açma Kolu
Opening Lever

Yan Kapak
Side Cover

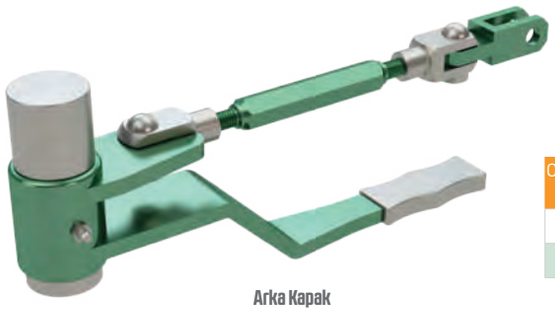

Arka Kapak
Back Cover

Order Number **Sipariş No**	Type **Tip**
170406	**Yan Kapak** / Side Cover
170408	**Arka Kapak** / Back Cover

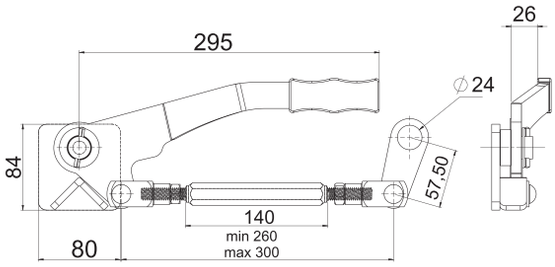

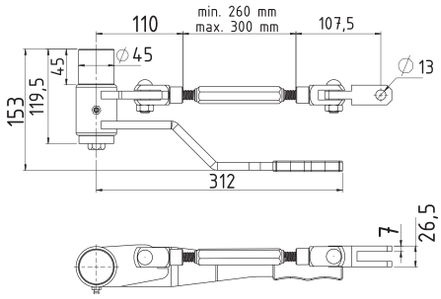

159910

Alt Açılır Menteşe
Upside - Down Forged Hinge

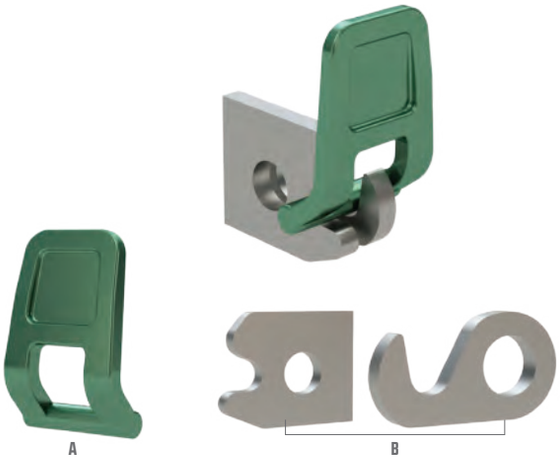

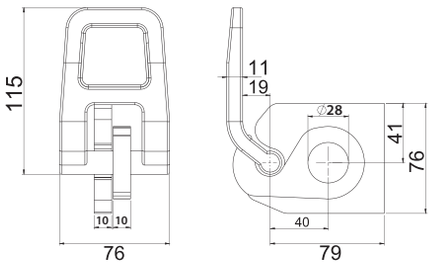

159920

İlave Menteşe

Side Board Hinge With Spring Lock

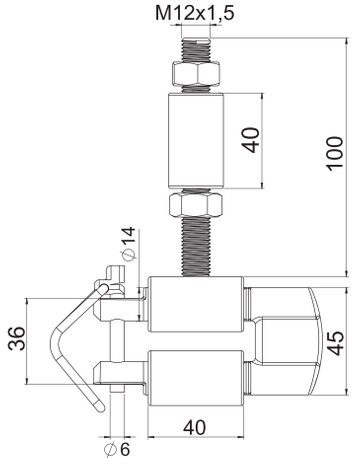

170500

Alt ve Üste Açılır Menteşe Sistemi

Top and Bottom Folding Hinge System

Mil Hariç / Without Shaft

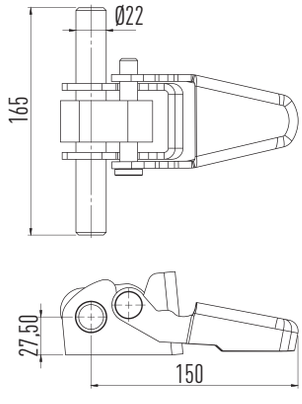

170550

Yeni Menteşe

New Hinge

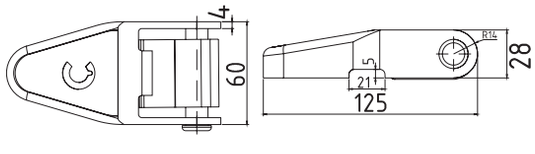

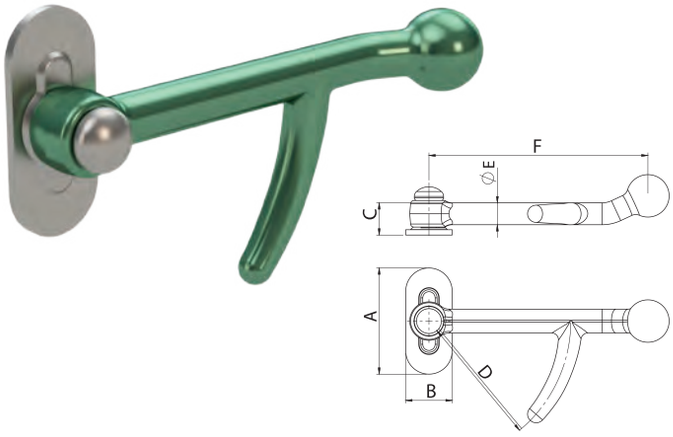

170560

Topuzlu Kilit
Knob Lock

Order Number **Sipariş No**	Model **Model**	Side **Yön**	**Ölçüler / Dimensions (mm)** **A**	**B**	**C**	**D**	**E**	**F**
170561	**Küçük Topuzlu Kilit** Small Knob Lock	**Sağ** Right	55	30	22	93	14.5	135
170562	**Küçük Topuzlu Kilit** Small Knob Lock	**Sol** Left	55	30	22	93	14,5	135
170571	**Büyük Topuzlu Kilit** Big Knob Lock	**Sağ** Right	80	35	24	107	16.5	165
170572	**Büyük Topuzlu Kilit** Big Knob Lock	**Sol** Left	80	35	24	107	16.5	165

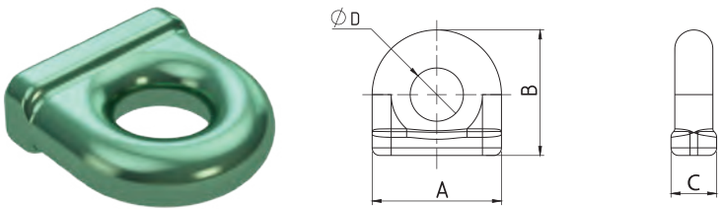

170565

Topuzlu Kilit Halkası
Knob Lock Ring

Order Number **Sipariş No**	Model **Model**	**Ölçüler / Dimensions (mm)** **A**	**B**	**C**	**D**
170565	**Küçük Topuzlu Kilit Halkası** Small Knob Lock Ring	34	33	12	14
170575	**Büyük Topuzlu Kilit Halkası** Big Knob Lock Ring	41	42	16	17

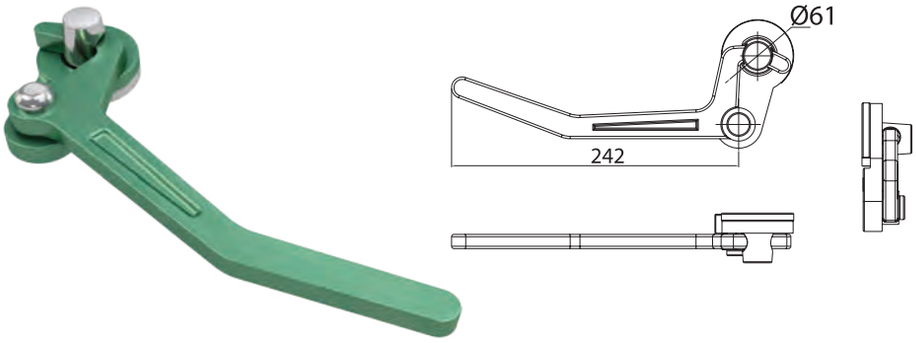

170600

Kancalı Kilit
Slanted Hinge

Order Number **Sipariş No**	Type **Tip**
170601	**Kancalı Kilit Sağ** Slanted Hinge Right
170602	**Kancalı Kilit Sol** Slanted Hinge Left

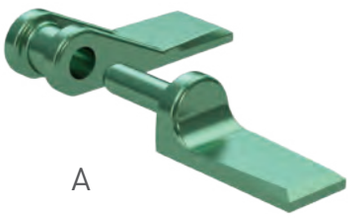

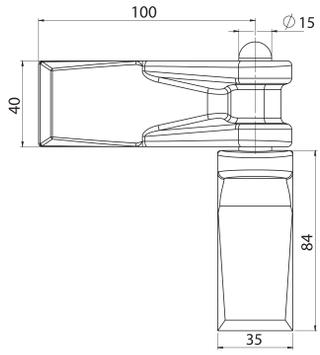

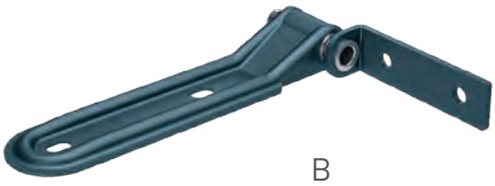

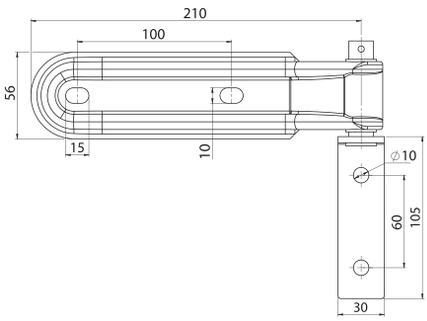

170650

Düz Menteşe
Flati Hinge

Order Number **Sipariş No**	Type **Tip**
170650	**Dövme Menteşe (A)** Forged Hinge
170655	**Kapak Menteşe 220mm İthal (B)** Cover Hinge

159000

Büyük Damper Menteşe

Dumper Hinge / Big

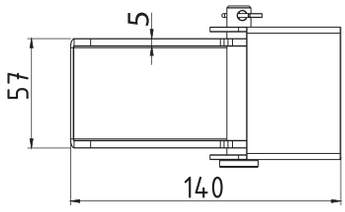

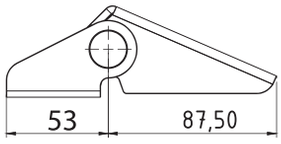

159100

Orta Damper Menteşe

Dumper Hinge / Middle

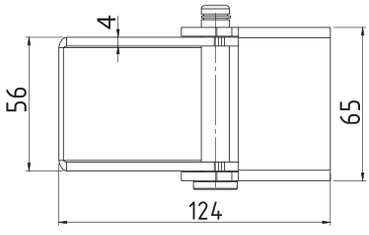

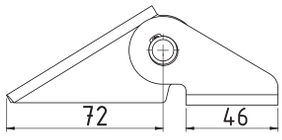

159200

Küçük Damper Menteşe

Dumper Hinge / Small

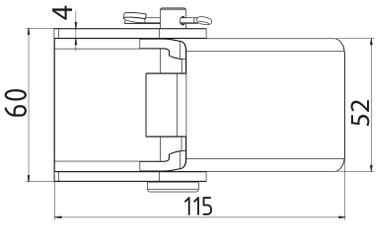

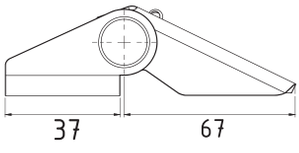

159300

Büyük Pikap Menteşe

Pickup Hinge / Big

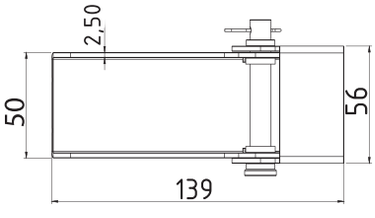

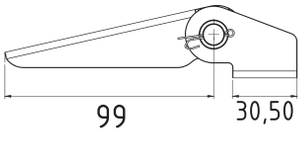

159400

Orta Pikap Menteşe

Pickup Hinge / Middle

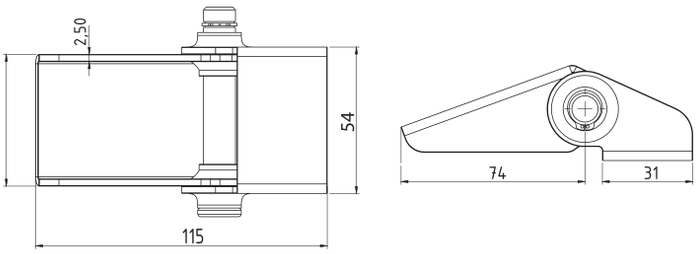

159500

Küçük Pikap Menteşe

Pickup Hinge / Small

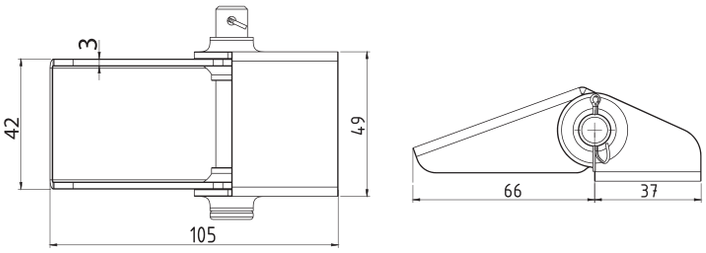

159590

Üçgen Menteşe

Triangle Hinge

Minik / Tiny

Normal

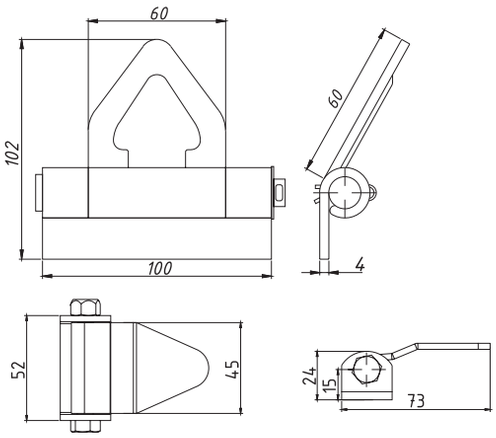

Order Number **Sipariş No**	Type **Tip**
159600	**Normal**
159610	**Minik** / Tiny

159700

Büyük Üçgen Menteşe

Triangle Hinge / Big

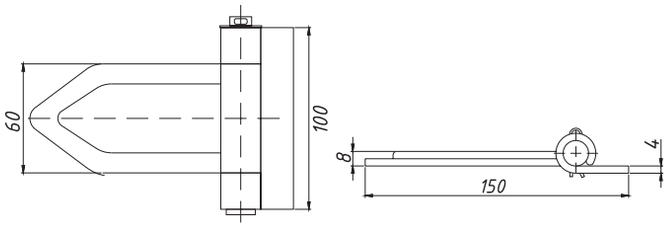

154790
Helezon
Screw Conveyor

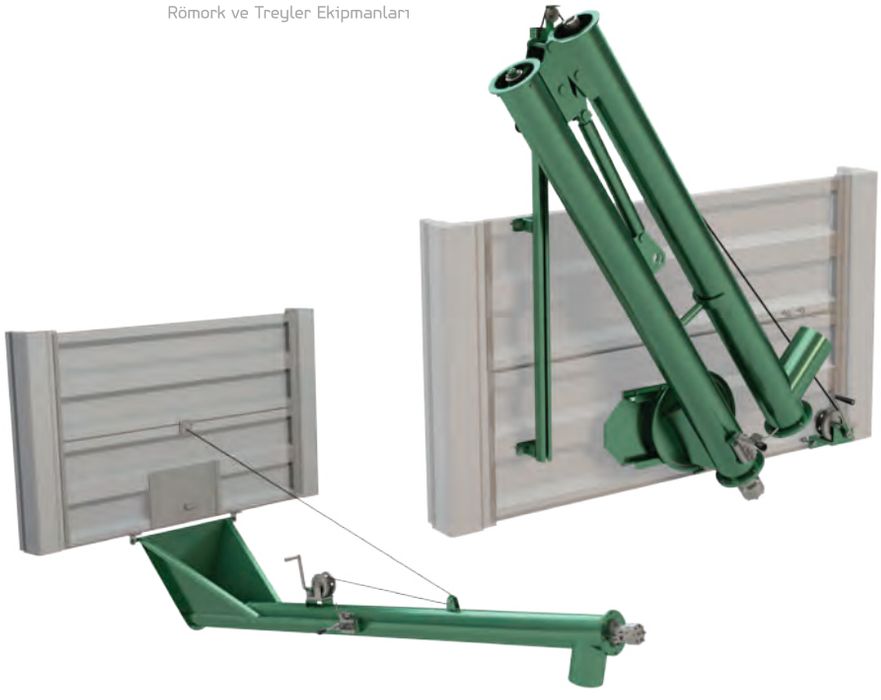

Order Number **Sipariş No**	Lenght (mm) / Diameter (mm) **Uzunluk (mm) / Çap (mm)**	Capacity (t/h) **Kapasite (ton/saat)**	Feature **Özellik**	Max. Oil Flow (l/min) **Maks. Yağ Akışı (l/dk)**	Type **Model**
154794	3.000 / Ø170	30	**Havuzlu - El Vinçli** With Tank - With Hand Winch	60	**Geriye boşaltma** Rear discharge
154791	4.000 / Ø170	30	**Liftli - El Vinçli** With Hydraulic Cylinder - With Hand Winch	60	**Yana boşaltma** Side discharge
154795	4.000 / Ø170	30	**Liftli - El Vinçsiz** With Hydraulic Cylinder - Without Hand Winch	60	**Yana boşaltma** Side discharge
154790	4.000 / Ø170	30	**Liftsiz - El Vinçli** Without Hydraulic Cylinder - With Hand Winch	60	**Yana boşaltma** Side discharge
154792	4.000 / Ø170	30	**Liftsiz - El Vinçsiz** Without Hydraulic Cylinder - Without Hand Winch	60	**Yana boşaltma** Side discharge
154793	5.000 / Ø220	55	**Liftli - El Vinçli** With Hydraulic Cylinder - With Hand Winch	60	**Yana boşaltma** Side discharge
154796	5.000 / Ø220	55	**Liftli - El Vinçsiz** With Hydraulic Cylinder - Without Hand Winch	60	**Yana boşaltma** Side discharge
154797	5.300 / Ø320	180	**Liftli - El Vinçli** With Hydraulic Cylinder - With Hand Winch	85	**Yana boşaltma** Side discharge
154798	5.300 / Ø320	180	**Liftli - El Vinçsiz** With Hydraulic Cylinder - Without Hand Winch	85	**Yana boşaltma** Side discharge

154810
Katı Gübre Helezonu
Manure Spreader

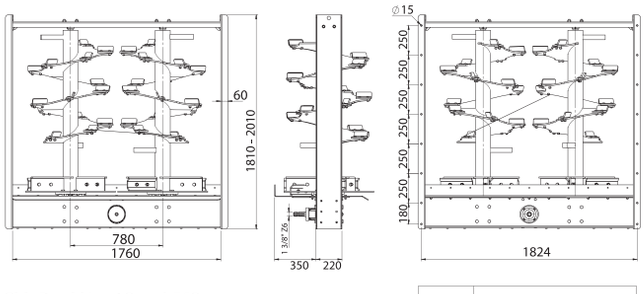

Giriş Devri / *Input Speed: 540 rpm*

INPUT SPEED GİRİŞ DEVRİ	540 r.p.m

136000

Hava Fren Sistemi
Air Brake System

Order Number **Sipariş No**	Type **Tip**
136000	**Tek Körüklü** / Single Diaphragm
136005	**Çift Körüklü** / Double Diaphragm
136006	**Dört Körüklü** / Four Diaphragm
136007	**İmdatlı Körüklü** / Spring Brake Diaphragm

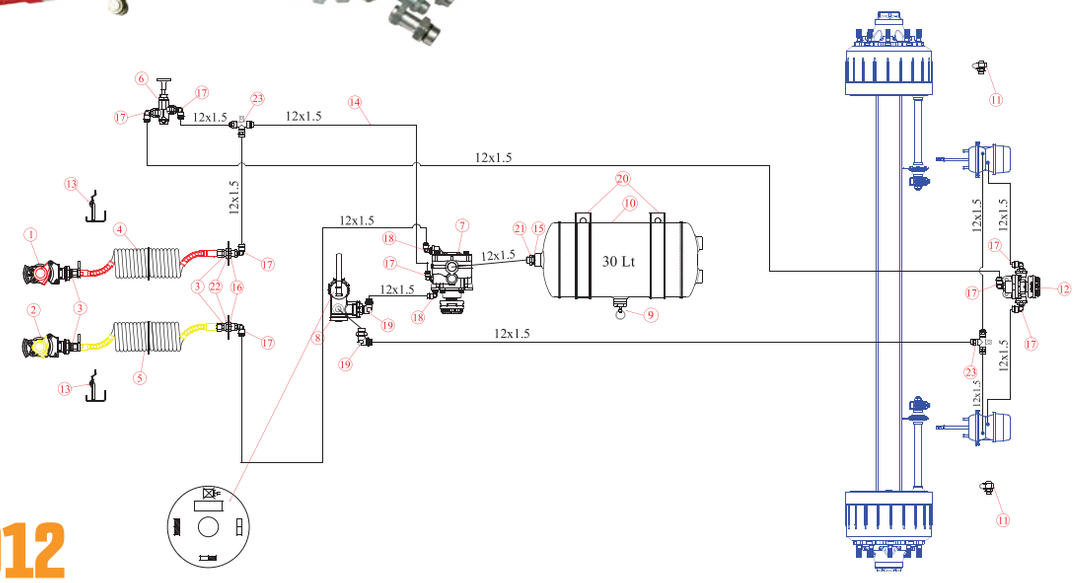

136012

Fren Basınç Kontrol Valfi
Brake Pressure Bar Control Valve

Çizimdeki ürünler opsiyonludur.
The products on scheme are optional.

No **Sıra No**	Product Name **Ürün Adı**	Pcs. **Adet**
1	**Hava Kaplini Kırmızı** / Coupling Head Supply	1
2	**Hava Kaplini Sarı** / Coupling Head Control	1
3	**Kaplin Adaptörü** / Coupling Adaptor	4
4	**Spiral Hortum Kırmızı** / Spiral Hose Red	1
5	**Spiral Hortum Sarı** / Spiral Hose Yellow	1
6	**Park Fren Valfi** / Parking Brake Valve	1
7	**Römork Kontrol Valfi** / Trailer Control Valve	1
8	**Yük Ayar Valfi** / Load Sensing Valve	1
9	**Su Boşaltma Valfi** / Drain Valve	1
10	**Hava Tankı 30 L** / Air Reservoir	1
11	**Test Point** / Test Point	2
12	**Çabuk Tahliye Valfi** / Quick Release Valve	1
13	**Kaplin Askısı** / Coupling Hangerr	2
14	**Polyemid Hortum Ø12** / Polyamid Hose	20 M
15	**Kontra Somun** / Lock Nut	1
16	**Kontra Somun** / Lock Nut	2
17	**Pnomatik Dirsek M16-Ø12** / Pneumatic Elbow	8
18	**Pnomatik Dirsek M14-Ø12** / Pneumatic Elbow	2
19	**Pnomatik Dirsek M22-Ø12** / Pneumatic Elbow	2
20	**Saddle** / Saddle	2
21	**Ara Nipel** / Nipple	1
22	**Kaplin Adaptörü** / Coupling Adaptor	2
23	**Pnomatik Askılı T** / Pneumatic Hanger T Ø12 - Ø12 - Ø12	2

134000

Su Tankı
Water Tank

2 mm Galvanizli / Galvanized
2,5 mm Galvanizli / Galvanized
2 mm Krom Nikel / Chrome Nickel

Order Number **Sipariş No**	Capacity **Kapasite**	Length (cm) **Uzunluk (cm)**	Width (cm) **En (cm)**	Height (cm) **Yükseklik (cm)**
134010	1.000	120	112	77
134020	1.500	200	112	77
134030	2.000	200	130	100
134040	2.500	240	130	100
134050	2.800	280	130	100
134055	3.000	240	145	107
134060	3.000	300	130	100
134070	4.000	240	166	117
134080	5.000	300	166	117
134090	6.000	360	166	117
134100	8.000	480	166	117
134110	10.000	600	166	117

Order Number **Sipariş No**	Capacity **Kapasite**	Width (cm) **En (cm)**	Height (cm) **Yükseklik (cm)**
134596	1.500	112	77
134590	2.500	130	100
134592	3.000	145	107
134595	4.000	166	117

134590

Su Tankı Alın Kapağı
Water Tank Front Panel

135000

Çayırova Santrifüj (Şaftsız)
Centrifuge (Without Shaft)

Order Number **Sipariş No**	Type **Tip**
135006	**2" Santrifüj** / Centrifuge
135020	**3" Santrifüj** / Centrifuge

135000

Şaft
Shaft

Order Number **Sipariş No**	Product Name **Ürün Adı**
135040	**Santrifüj Şaftı - Kılıflı 24x62 Kapalı Boyu 100 cm Normal** / Standard PTO Shaft for Centrifuge - with cover 24x62 100cm
135046	**Santrifüj Şaftı - Kılıflı 24x62 Kapalı Boyu 120 cm** / Standard PTO Shaft for Centrifuge - with cover 24x62 120cm
135015-1	**Santrifüj Şaftı Çok Açılı Belden Kırma Kapalı Boyu 105 cm** / Wide Angle PTO Shaft for Centrifuge - Pleated 105 cm
135015	**Santrifüj Şaftı Çok Açılı Belden Kırma Kapalı Boyu 120 cm** / Wide angle PTO Shaft for Centrifuge - Pleated 120cm
135041-3	**Şaft Çayır Biçme Kılıflı 27x74 Kapalı Boyu 100 cm** / Standard PTO Shaft for Lawn Mower - with cover 27x74 100cm
135041-5	**Şaft En Büyük 30x106 Kapalı Boyu 45 cm** / Standard PTO Shaft - BIG - 30x106 45cm
135041	**Şaft Gübre Serpme Kılıflı 24x62 Kapalı Boyu 85 cm** / Standard PTO Shaft for Spreader - with cover 24x62 85cm
135041-2	**Şaft Tamburlu Cırcırlı Kılıflı 27x74 Kapalı Boyu 95 cm** / Standard PTO Shaft for Disc Mower - with cover 27x74 95cm
135041-4	**Şaft Yem Karma Kılıflı 27x92 Kapalı Boyu 75 cm** / Standard PTO Shaft for Feed Mixer - with cover 27x92 75cm
135041-1	**Şaft İlaçlama Kılıflı 24x62 Kapalı Boyu 75 cm** / Standard PTO Shaft for Atomizer - with cover 24x62 75cm

İtfaiye Ekipmanları
Fire Equipments

A

B

C

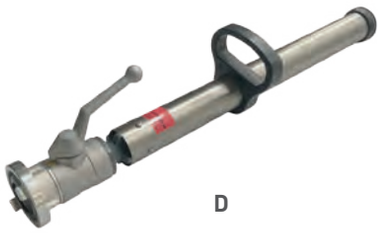

D

E

F

G

H

I

J

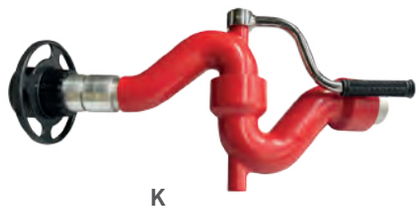

K

Order Number **Sipariş No**	Product Name **Ürün Adı**	Model **Model**
152049	**İtfaiye Hortum 1.5" Beyaz Bez 20 mt.** / Fire Hose 1.5" White 20 mt.	**A**
152051	**İtfaiye Hortum 2" Beyaz Bez 20 mt.** / Fire Hose 2" White 20 mt.	**A**
152050	**İtfaiye Hortum 1.5" Kırmızı Bez 20 mt.** / Fire Hose 1.5" Red 20 mt.	**B**
152052	**İtfaiye Hortum 2" Kırmızı Bez 20 mt.** / Fire Hose 2" Red 20 mt.	**B**
152060	**İtfaiye Kumandalı Lans 1,5" 3 Konumlu** / Fire Nozzle 1,5"	**C**
152061	**İtfaiye Kumandalı Lans 2" 3 Konumlu** / Fire Nozzle 2"	**C**
152062	**İtfaiye Köpük Lansı 2"** / Fire Foam Nozzle 2"	**D**
152065	**İtfaiye Köpük Melanjörü 2"** / Fire Foam Melanger 2"	**E**
152070	**İtfaiye Rekor ve Zincirli Kapak 1,5" Dıştan Dişli** / Fire East Joint 1,5"	**F**
152071	**İtfaiye Rekor ve Zincirli Kapak 2" Dıştan Dişli** / Fire East Joint 2"	**F**
152072	**İtfaiye Hortum Rekoru 1"** / Fire Hose Flange 1"	**G**
152073	**İtfaiye Hortum Rekoru 1,5"** / Fire Hose Flange 1,5"	**G**
152074	**İtfaiye Hortum Rekoru 2"** / Fire Hose Flange 2"	**G**
152080	**İtfaiye Tetikli Tabanca 1"** / Fire Trigger Gun 1"	**H**
152081	**İtfaiye Tetikli Tabanca Nozullu 1"** / Fire Trigger Gun Nozzled 1"	**I**
152090	**İtfaiye Su Monitörü 2" Tepeden Atmalı** / Fire Monitor 2"	**J**
152091	**İtfaiye Su Monitörü 2" Tepeden Atmalı Nozullu** / Fire Monitor Nozlled 2"	**K**

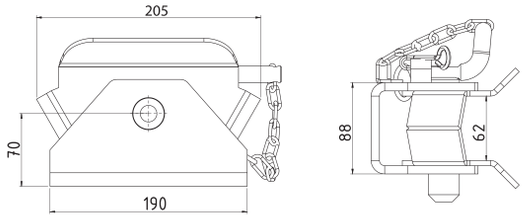

146520

Merkezli Arka Çeki - Sac

Back Coupling - Sheet

Capacity (Kg) **Kapasite (Kg)**
25 km/h - 8.000

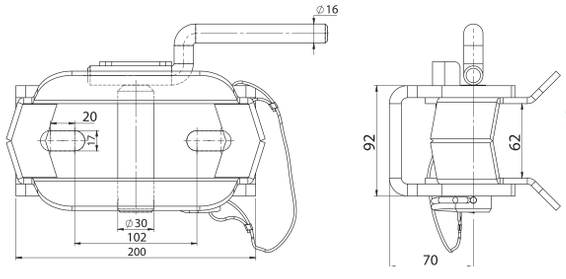

146530

Merkezli Arka Çeki E-Belgeli - Sac

Back Coupling e-Certificated - Sheet

Capacity (Kg) **Kapasite (Kg)**
D:56 kN

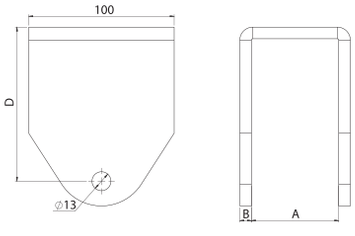

138100

Makas Kulağı Deliksiz

Spring Sheet Without Hole

Order Number **Sipariş No**	Inner Size-A (mm) **Ara Ölçü-A (mm)**	Thickness-B (mm) **Kalınlık-B (mm)**	Height-C (mm) **Yükseklik-C (mm)**
138110	60	8	106
138120	65	10	108
138130	75	10	108

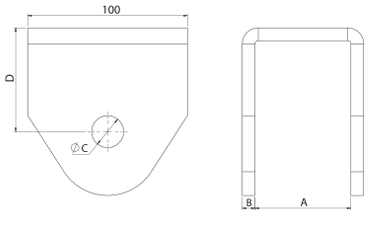

138200

Makas Kulağı Delikli

Spring Sheet With Hole

Order Number **Sipariş No**	Inner Size-A (mm) **Ara Ölçü-A (mm)**	Thickness-B (mm) **Kalınlık-B (mm)**	Hole Dia.-C (mm) **Delik Çapı-C (mm)**	Height-D (mm) **Yükseklik-D (mm)**
138210	60	8	20	82
138220	65	10	26	62
138230	75	10	26	65

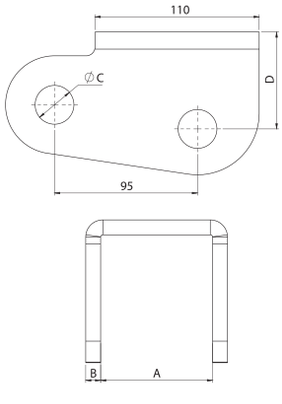

138300

Makas Kulağı Ön

Front Spring Sheet

Order Number **Sipariş No**	Inner Size-A (mm) **Ara Ölçü-A (mm)**	Thickness-B (mm) **Kalınlık-B (mm)**	Hole Dia.-C (mm) **Delik Çapı-C (mm)**	Height-D (mm) **Yükseklik-D (mm)**
138310	60	8	20	62
138320	65	10	26	64
138330	75	10	26	60

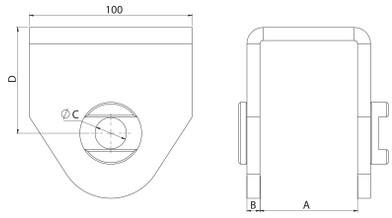

138250

Makas Kulağı Burçlu
Spring Sheet With Bush

Order Number Sipariş No	Inner Size-A (mm) Ara Ölçü-A (mm)	Thickness-B (mm) Kalınlık-B (mm)	Hole Dia.-C (mm) Delik Çapı-C (mm)	Height-D (mm) Yükseklik-D (mm)
138260	60	8	20	82
138270	65	10	26	62
138280	75	10	26	65

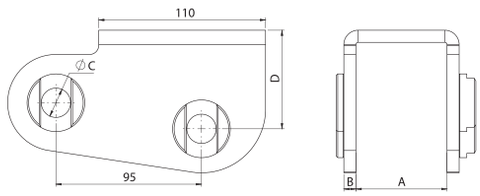

138350

Makas Kulağı Ön Burçlu
Spring Sheet Front With Bush

Order Number Sipariş No	Inner Size-A (mm) Ara Ölçü-A (mm)	Thickness-B (mm) Kalınlık-B (mm)	Hole Dia.-C (mm) Delik Çapı-C (mm)	Height-D (mm) Yükseklik-D (mm)
138360	60	8	20	62
138370	65	10	26	64
138380	75	10	26	60

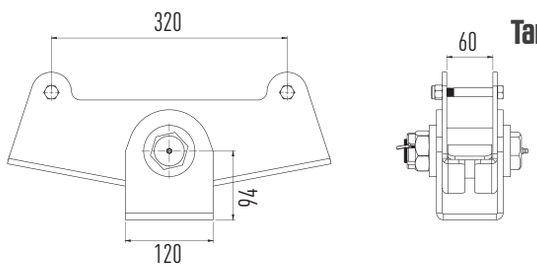

137400

Tandem Makas Aparatı Ekonomik Model
Equalizer Eco Model

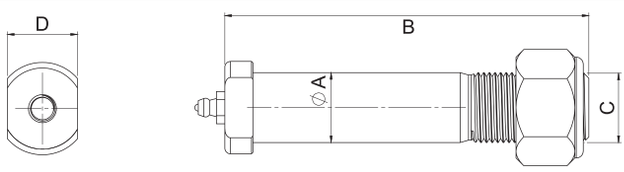

140500

Frezeli Perno Somunlu
Spline Peg With Nut

Order Number Sipariş No	Inner Size-A (mm) Ara Ölçü-A (mm)	Thickness-B (mm) Kalınlık-B (mm)	Hole Dia.-C (mm) Delik Çapı-C (mm)	Height-D (mm) Yükseklik-D (mm)
140510	19	120	3/4 "	19
140520	19	150	3/4 "	19
140530	25	130	1"	25
140540	25	140	1"	25
140550	25	190	1"	25

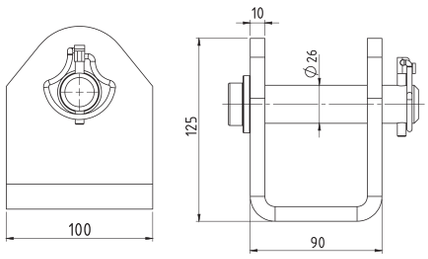

138400

Lama Çeki
Sheet Drawbolt

Order Number Sipariş No	Type Tip
138410	**Lama Çeki** / Sheet Drawbolt
138421	**Pim** / Pin

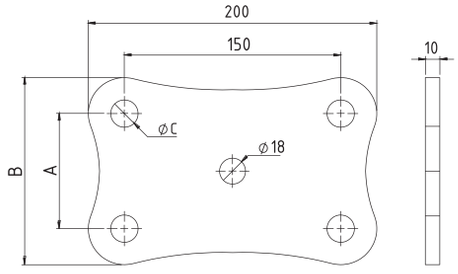

138500

Düz Dingil Pabucu
Flat Axle Sheet

Order Number **Sipariş No**	Sheet **Lama**	A (mm)	B (mm)	C (mm)
138500	57-63	80	130	19
138510	70	90	140	21

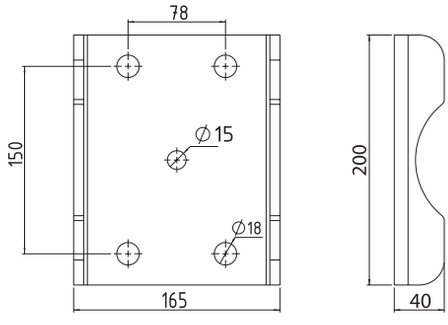

138600

Boru Dingil Pabucu
Axle Sheet for Tube

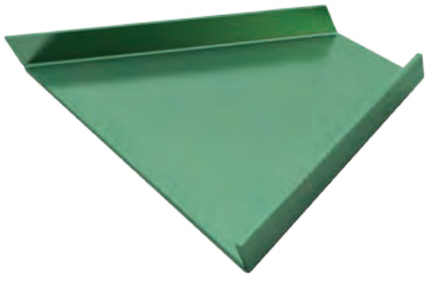

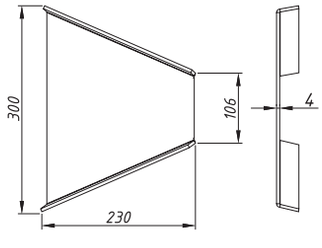

138700

Eğme Dikme
Bent Sheet

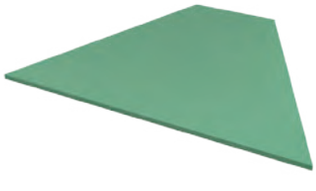

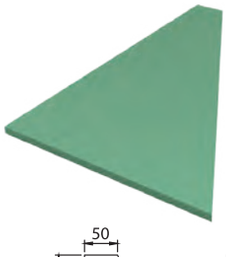

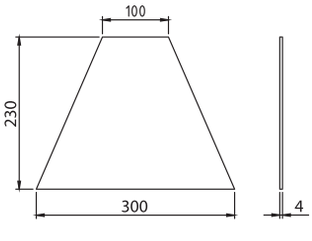

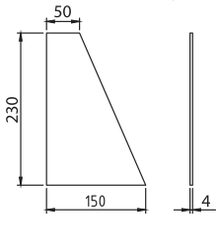

138800

Düz Dikme ve Gönye
Flat Spring Sheet

Order Number **Sipariş No**	Type **Tip**
138810	**Düz Dikme** / Flat Spring Sheet
138820	**Gönye** / Miter

139000

Bağlantı (Somunlu)
Connectors (With Nut)

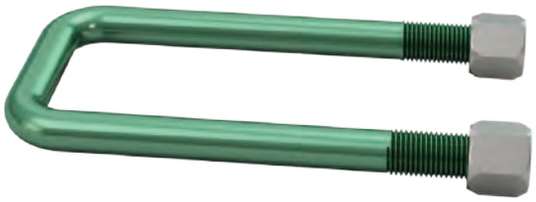

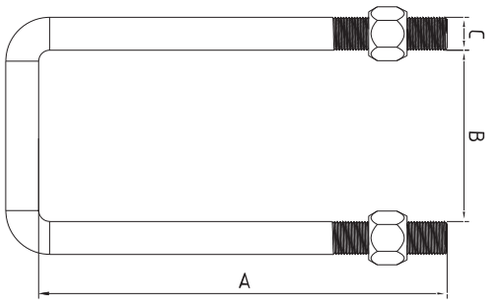

Order Number **Sipariş No**	Length-A (mm) **Boy-A (mm)**	Inner Size-B (mm) **Ara Ölçü-B (mm)**	Thread-C **Yiv Ölçüsü-C**
139010	50	50	M12x1,5
139020	70	50	M12x1,5
139030	100	50	M12x1,5
139080	60	60	M16
139090	80	60	M16
139100	100	60	M16
139110	120	60	M16
139120	140	60	M16
139130	160	60	M16
139140	180	60	M16
139150	200	60	M16
139160	220	60	M16
139200	200	65	M16
139201	200	75	M16
139210	220	65	M16
139211	200	75	M16
139220	250	65	M16
139221	250	75	M16
139230	150	75	M20
139240	200	75	M20

140000

Perno (Somunlu)
Spring Peg (With Nut)

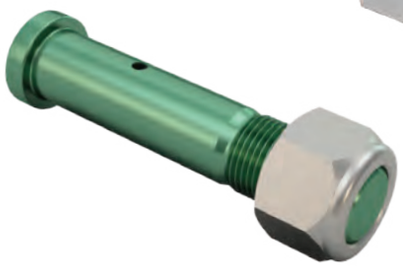

Order Number **Sipariş No**	Thickness-A (mm) **Kalınlık-A (mm)**	Length-B (mm) **Boy-B (mm)**	Thread-C **Yiv Ölçüsü-C**	Model **Model**
140010	19	120	3/4''	A
140020	19	150	3/4''	A
140205	25	130	1''	A
140210	25	140	1''	A
140220	25	190	1''	A
140223	30	152	M30	B
140222	30	170	M30	B

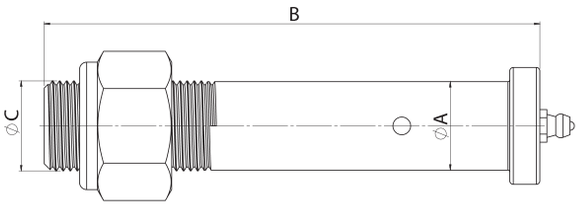

A

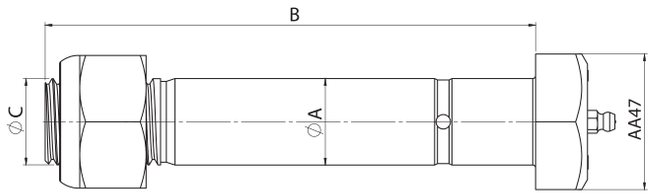

B

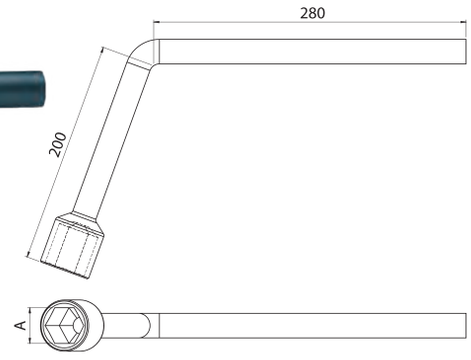

143000

Bijon Anahtarı
Bolt Key

Order Number **Sipariş No**	Inner Dia.-A (mm) **İç Çap-A (mm)**
143010	24
143020	27
143030	32

145000

Makas Sacı
Spring Sheet

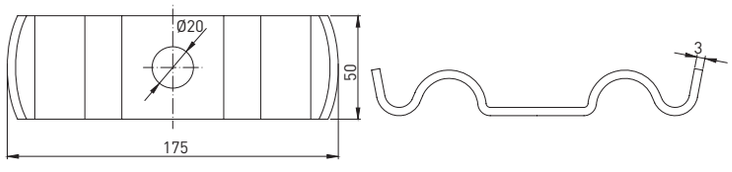

144000

Perno Yuvası
Peg Socket

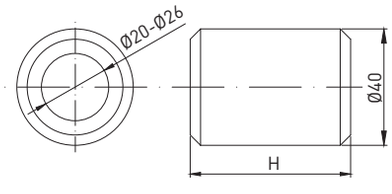

Order Number **Sipariş No**	Inner Dia.-B (mm) **İç Çap-B (mm)**	Height -H (mm) **Yükseklik-H (mm)**
144010	20	60
144020	26	65

146000

Döküm Küpe
Cast Spring Ear

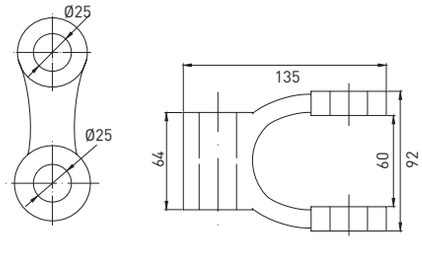

Order Number **Sipariş No**	Type **Tip**
146010	**Kısa** / Short
146020	**Uzun** / Long

220013

Platform - Korkuluklu - Galvanizli

Galvanized - Safety - Platform

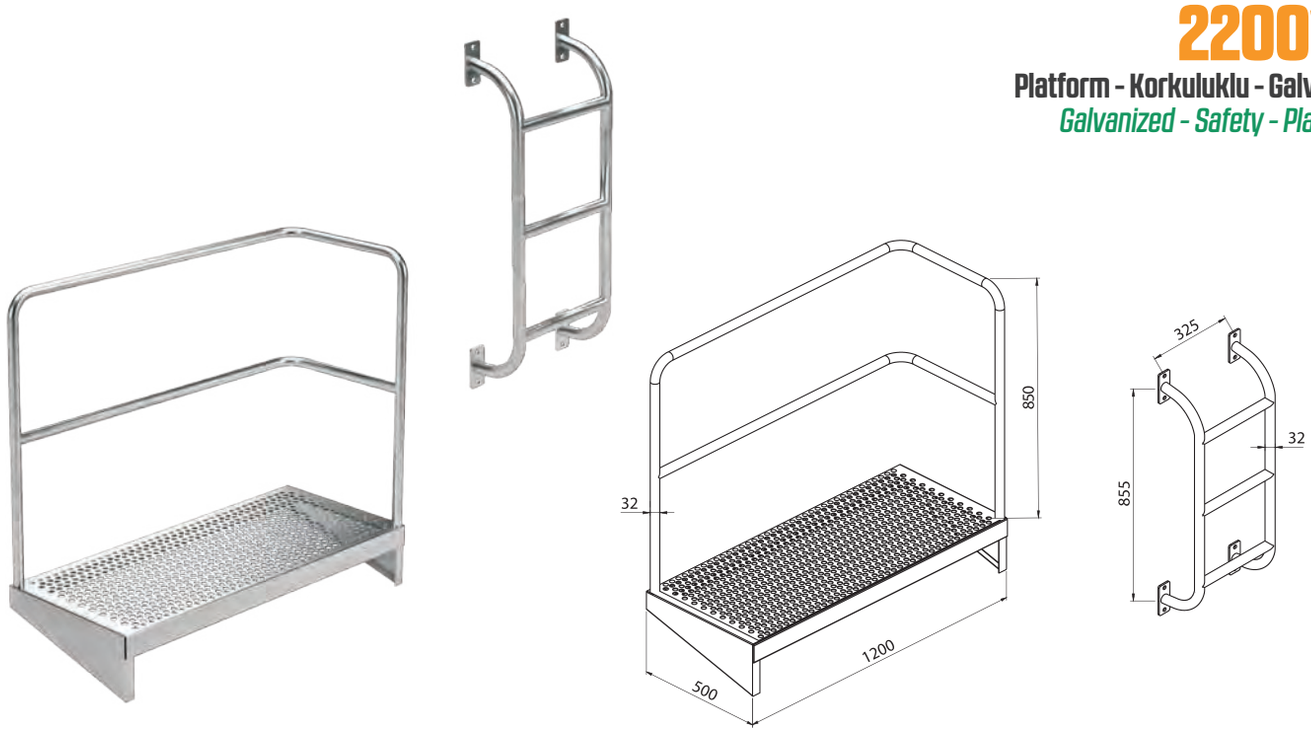

135005

Kamyon Kulak Takımı

Truck Suspension Hanger Kit

146900

Traktör Koltuğu

Tractor Seat

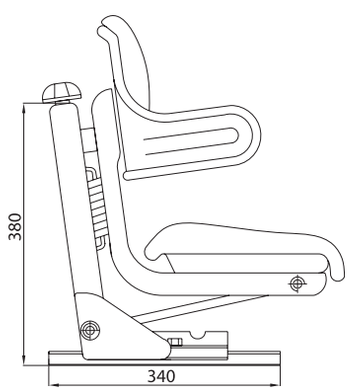

Order Number **Sipariş No**	Type **Tip**
146910	**Kızaksız Kolsuz** / Without Slide and Arm
146915	**Kızaksız Kollu** / Without Slide, With Arm
146920	**Kızaklı Kolsuz** / With Slide, Without Arm
146925	**Kızaklı Kollu** / With Slide and Arm

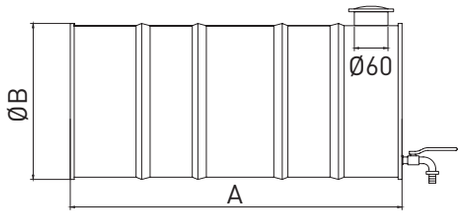

147000

Su Tankı Galvanizli
Water Tank / Galvanized

Order Number **Sipariş No**	Capacity (Lt) **Kapasite (Lt)**	Length - A (mm) **Boy - A (mm)**	Diameter - B (mm) **Çap - B (mm)**
147005	16	250	280
147010	25	400	280
147030	35	600	280
147040	70	600	380
147050	90	800	380
147510	**Su Tankı Şeridi (Adet)** / Water Tank Strips		

148000

Su Tankı Plastik
Water Tank Polyethylene

Order Number **Sipariş No**	Capacity (Lt) **Kapasite (Lt)**	Type **Tip**
148008	30	**İnce** / Thin
148010	30	**Kalın** / Thick
148020	50	**Kalın** / Thick

211035

Evrak Saklama Kutusu
User Guide Box

Order Number **Sipariş No**	Type **Tip**
211036	**Küçük** / Small
211037	**Orta** / Middle
211038	**Büyük** / Big

122655

El Freni - Kriko Model
Handbrake - Jack Model

149000

El Freni
Hand Brake

Order Number **Sipariş No**	Type **Tip**
149010	**Standart** / Standard
149030	**Yeni Model** / New Model

151000

Tanker Kapağı
Tanker Cover

Order Number **Sipariş No**	Çap Ø **Diameter Ø**	Type **Tip**
151010	400	**Standart** / Standard
151015	450	**Özel** / Special
151020	400	**Galvanizli** / Galvanized
151025	360	**Galvanizli - Küçük** / Galvanized - Small
151030	400	**Siboplu** / With Valve
151035	400	**Galvanizli - Alüminyum** / Galvanized - Aluminum

150000

Rulman
Bearing

Order Number **Sipariş No**	30.000 Series **30.000 Serisi**
150005	30.204
150015	30.205
150025	30.206
150035	30.207
150045	30.208
150055	30.209
150065	30.210
150075	30.211
150085	30.212

Order Number **Sipariş No**	32.000 Series **32.000 Serisi**
150195	32.207
150205	32.208
150215	32.209
150225	32.210
150235	32.211
150245	32.212
150255	32.213
150265	32.214
150275	32.215
150285	32.217
150300	33.021

111000

Jant / *Wheel Rim*

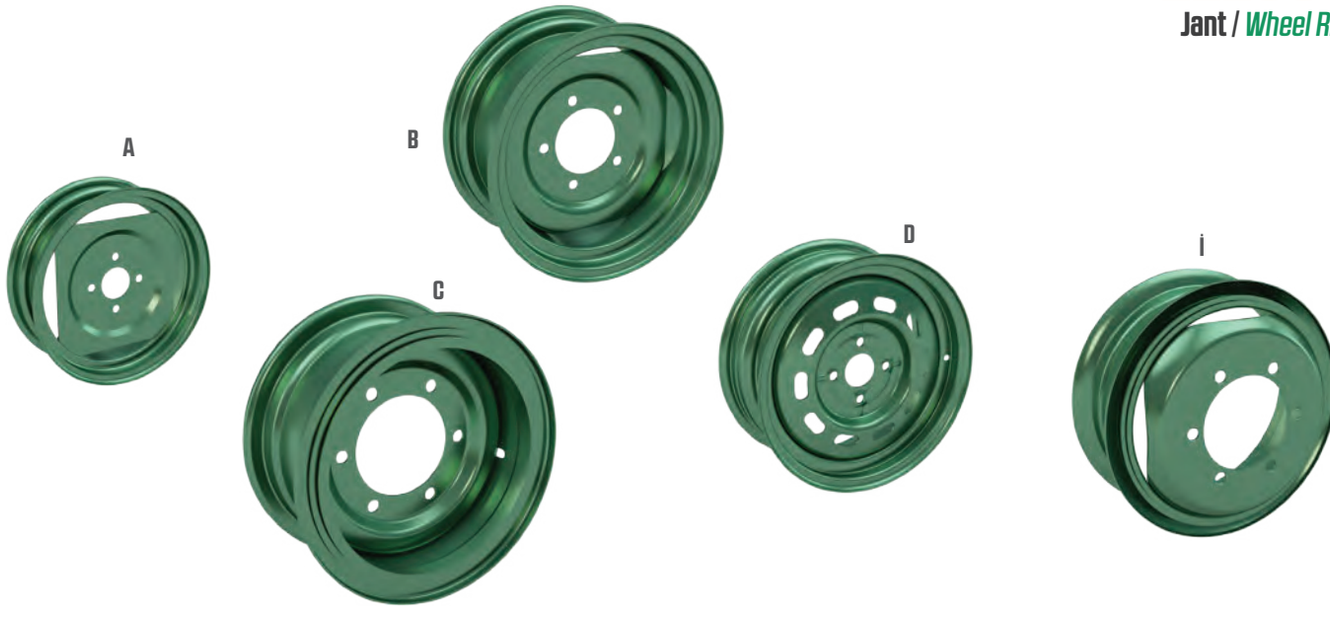

Lastik -Jant ölçüleri ETRTO (Avrupa Jant Lastik Teknik Organizasyonu) verilerine göre 5% Değişiklik gösterebilir.
Tyre and Rim dimension can variate ±%5 according to ETRTO (European Tyre and Rim Technical Organization)

Order Number **Sipariş No**	Rim Size **Jant Ebadı**	Type **Tipi**	Feature **Özellik**	Bolt Pcs. **Bijon Sayısı**	Center Hole **Porya Göbeği**	Bolt Center **Bijon Mer.**	Outer Dia **Dış Çap**	Width **Genişlik**	Rim Thicknes **Göbek Kalınlığı**	Disc Thicknes **Kasnak Kalınlığı**	Suitable Tyre **Uygun Lastik**	Model **Model**
111005	4.50x6	**Dubleks / Borulu / Rulmanlı / Zirai** Tubeless / Tube / Bearing / Agri.	TL	-	-	-	153	115	-	-	15x6.00-6	B
111008	2.50x8	**Çift Parçalı / Zirai** Double Parts / Agri.	TT	4	58	98	203	64	2	2	4.00-8	A
111009	3.50x8	**Dubleks / Zirai** Tubeless / Agri.	TL	4	58	98	203	102	4	2	4.00-8	A
111012	3.00x8	**Çift Parçalı** Two Piece	TT	4	58	98	203	76	4	4	5.00-8	A
111012-1	5.00x8	**Dubleks / Borulu / Rulmanlı / Zirai** Tubeless / Tube / Bearing / Agri.	TL	4	58	98	203	127	4	2	16.5x6.50-8	A
111013	5.00x8	**Dubleks / Zirai** Tubeless / Agri.	TL	4	58	98	203	127	4	2	16.5x6.50-8	A
111014	4.50x9	**Çift Sekman / Zirai** Double Segment / Agri.	TT	5	110	160	229	115	7	5	6.00-9	C
111015	4.50x10	**Dubleks / Zirai** Tubeless / Agri.	TL	4	58	98	254	114	4	2.5	5.00-10	A
111017	7.00x10	**Dubleks / Zirai** Tubeless / Agri.	TL	5	94	140	254	178	5	4	20.5/8.00-10	A
111020	5.00x10	**Çift Sekman / Zirai** Double Segment / Agri.	TT	5	110	160	254	127	6	4	6.50-10	C
111030	5.50x12	**Çift Sekman / Zirai** Double Segment / Agri.	TT	5	110	160	305	140	6	4	7.00-12	C
111031	5.50x12	**Çift Sekman / Zirai** Double Segment / Agri.	TT	6	160	205	305	140	6	4	7.00-12	C
111050	8.00x12	**Dubleks / Zirai** Tubeless / Agri.	TL	5	110	160	305	203	6	4	10.0/80-12	B
111053	8.00x12	**Dubleks / Zirai** Tubeless / Agri.	TL	6	160	205	305	203	6	4	10.0/80-12	B
111054	4.00x12	**Dubleks / Zirai** Tubeless / Agri.	TL	5	110	140	305	102	4	3	5.00-12	B
111056	4.00x12	**Dubleks / Zirai** Tubeless / Agri.	TL	4	58	98	305	102	4	3	5.00-12	B
111057	5.50x12	**Dubleks / Zirai** Tubeless / Agri.	TL	4	52	95	305	140	4	3	6.50/80-12	B
111058	5.50x12	**Dubleks / Zirai** Tubeless / Agri.	TL	4	72	98	305	140	4	3	6.50/80-12	B

TL Dubleks / *Tubeless*
TT İç Lastikli / *With Inner Tube*

111000
Jant / *Wheel Rim*

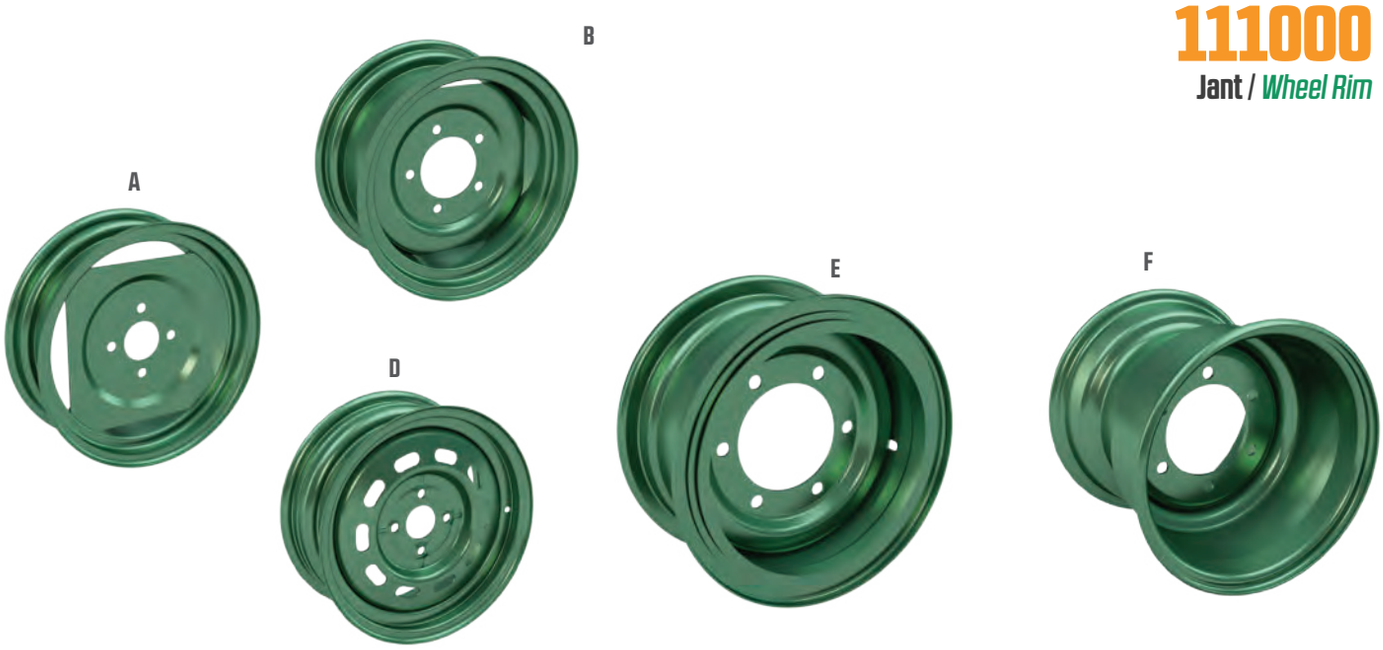

Lastik -Jant ölçüleri ETRTO (Avrupa Jant Lastik Teknik Organizasyonu) verilerine göre 5% Değişiklik gösterebilir.
Tyre and Rim dimension can variate ±%5 according to ETRTO (European Tyre and Rim Technical Organization)

Order Number **Sipariş No**	Rim Size **Jant Ebadı**	Type **Tipi**	Feature **Özellik**	Bolt Pcs. **Bijon Sayısı**	Center Hole **Porya Göbeği**	Bolt Center **Bijon Mer.**	Outer Dia **Dış Çap**	Width **Genişlik**	Rim Thicknes **Göbek Kalınlığı**	Disc Thicknes **Kasnak Kalınlığı**	Suitable Tyre **Uygun Lastik**	Model **Model**
111061	4.50x13	**Dubleks / Otomotiv** Tubeless / Automotive	TL	5	66	112	330	114	4	3	165/80 R13	D
111063	6.00x13	**Dubleks / Otomotiv** Tubeless / Automotive	TL	5	66	112	330	153	4	3	195/50 R13	D
111064	5.50x13	**Dubleks / Otomotiv** Tubeless / Automotive	TL	5	66	112	330	140	4	3	165/80 R13	D
111065	6.00x13	**Dubleks / Otomotiv** Tubeless / Automotive	TL	5	66	112	330	153	4	3	195/50 R13	D
111070	4.00x13	**Dubleks / Zirai** Tubeless / Agri.	TL	4	58	98	330	102	4	3	165/80 R13	B
111075	4.00x13	**Dubleks / Zirai** Tubeless / Agri.	TL	5	110	140	330	102	4	3	165/80 R13	B
111080	5.50x14	**Dubleks / Otomotiv** Tubeless /Automotive	TL	4	58	98	356	140	4	3	185/65 R14	D
111081	5.00x14	**Dubleks / Otomotiv** Tubeless / Automotive	TL	5	66	112	356	127	4	3	185/65 R14	D
111085	4.00x14	**Dubleks / Zirai** Tubeless / Agri.	TL	5	110	160	356	102	4	3	185/65 R14	A
111085-2	4.00x14	**Dubleks / Zirai** Tubeless / Agri.	TL	4	98	160	356	102	4	3	175/65 R14	A
111090	5.50x14	**Dubleks / Zirai** Tubeless / Agri.	TL	5	110	160	356	140	4	3	185/65 R14	A
111100	7.00x15	**Dubleks / Zirai** Tubeless / Agri.	TL	4	58	98	381	178	7	4	225/70 R15	B
111101	7.00x15	**Dubleks / Zirai** Tubeless / Agri.	TL	5	110	160	381	178	7	4	225/70 R15	B
111102	7.00x15	**Dubleks/ Zirai** Tubeless / Agri.	TL	6	160	205	381	178	7	4	225/70 R15	B
111107	5.50x15	**Dubleks/ Zirai** Tubeless / Agri.	TL	5	110	160	381	140	7	4	195/65 R15	B
111110	7.00x15	**Çift Sekman / Zirai** Double Segment / Agri.	TT	6	160	205	381	178	7	4	8.15-15	E
111115	7.00x15	**Çift Sekman / Zirai** Double Segment / Agri.	TT	6	160	205	381	178	10	4	8.15-15	E
111120	5.50x15	**Dubleks / Otomotiv** Tubeless / Automotive	TL	4	58	98	381	140	4	3	195/65 R15	D
111121	3.50x15	**Dubleks / Zirai** Tubeless / Agri.	TL	4	58	98	381	89	4	3	5.00-15	E

TL Dubleks / *Tubeless*
TT İç Lastikli / *With Inner Tube*

111000

Jant / *Wheel Rim*

Lastik -Jant ölçüleri ETRTO (Avrupa Jant Lastik Teknik Organizasyonu) verilerine göre 5% Değişiklik gösterebilir.
Tyre and Rim dimension can variate ±%5 according to ETRTO (European Tyre and Rim Technical Organization)

Order Number **Sipariş No**	Rim Size **Jant Ebadı**	Type **Tipi**	Feature **Özellik**	Bolt Pcs. **Bijon Sayısı**	Center Hole **Porya Göbeği**	Bolt Center **Bijon Mer.**	Outer Dia **Dış Çap**	Width **Genişlik**	Rim Thicknes **Göbek Kalınlığı**	Disc Thicknes **Kasnak Kalınlığı**	Suitable Tyre **Uygun Lastik**	Model **Model**
111130	9.00x15.3	**Dubleks / Zirai** Tubeless / Agri.	TL	5	110	160	389	229	7	4	10.0/75-15.3	F
111131	9.00x15.3	**Dubleks / Zirai** Tubeless / Agri	TL	6	160	205	389	229	7	4	11.5/80-15.3	F
111132	9.50x15.3	**Dubleks / Zirai** Tubeless / Agri.	TL	6	160	205	389	242	7	5	12.5/80-15.3	F
111160	13.00x15.5	**Dubleks / Zirai** Tubeless / Agri.	TL	6	160	205	394	330	8	5	4.00/60-15.5	K
111161	13.00x15.5	**Dubleks / Zirai** Tubeless / Agri.	TL	8	221	275	394	330	10	5	4.00/60-15.5	K
111170	4.00x16	**Dubleks / Zirai** Tubeless / Agri.	TL	5	110	160	406	102	5	3	6.00-16	H
111171	4.00x16	**Dubleks / Zirai** Tubeless / Agri.	TL	5	110	140	406	102	5	3	6.00-16	H
111176	4.50x16	**Dubleks / Bombeli** Tubeless / Agri.	TL	-	72	-	406	102	7	3	6.00-16	H
111177	4.50x16	**Bombeli / Dubleks / Zirai** Convex / Tubeless / Agri.	TL	-	110	-	406	102	7	3	6.00-16	H
111180	450x16	**Dubleks / Zirai** Tubeless / Agri.	TL	5	110	160	406	115	5	3	6.50-16	H
111184	4.50x16	**Dubleks / Zirai** Tubeless / Agri.	TL	-	110	-	406	115	7	3	6.50-16	H
111186	4.50x16	**Dubleks / Zirai** Tubeless / Agri.	TL	-	72	-	406	115	7	3	6.50-16	H
111200	5.00x16	**Dubleks / Zirai** Tubeless / Agri.	TL	5	110	160	406	127	6	4	7.50-16	H
111201	5.00x16	**Dubleks / Zirai** Tubeless / Agri.	TL	5	110	140	406	127	6	4	7.50-16	H
111203	5.00x16	**Dubleks / Zirai** Tubeless / Agri.	TL	6	160	205	406	127	6	4	7.50-16	H
111210	5.50x16	**Çift Sekman / Zirai** Double Segment / Agri.	TT	5	110	160	406	140	7	5	7.50-16	E
111212	5.50x16	**Çift Sekman / Zirai** Double Segment / Agri.	TT	6	160	205	406	140	7	5	7.50-16	E
111230	5.50x16	**Çift Sekman Bombeli** Double Segment Convex	TT	6	160	205	406	140	7	5	7.50-16	İ
111231	5.50x16	**Çift Sekman Bombeli** Double Segment Convex	TT	5	110	160	406	140	7	5	7.50-16	İ

TL **Dubleks** / *Tubeless*
TT **İç Lastikli** / *With Inner Tube*

111000

Jant / *Wheel Rim*

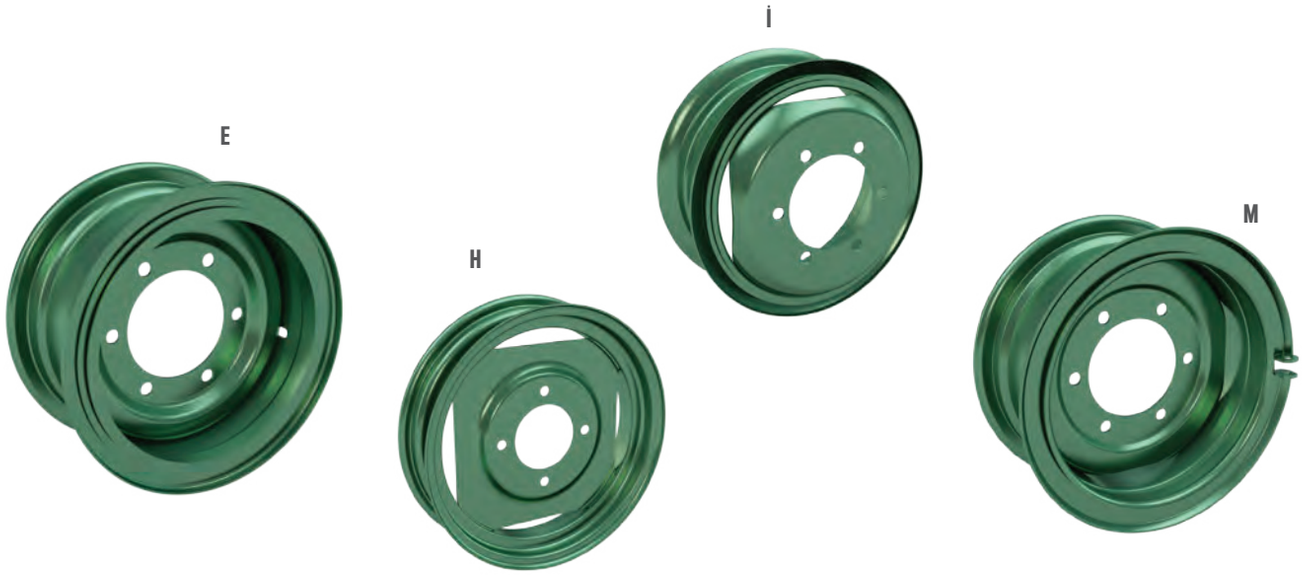

Lastik -Jant ölçüleri ETRTO (Avrupa Jant Lastik Teknik Organizasyonu) verilerine göre 5% Değişiklik gösterebilir.
Tyre and Rim dimension can variate ±%5 according to ETRTO (European Tyre and Rim Technical Organization)

Order Number **Sipariş No**	Rim Size **Jant Ebadı**	Type **Tipi**	Feature **Özellik**	Bolt Pcs. **Bijon Sayısı**	Center Hole **Porya Göbeği**	Bolt Center **Bijon Mer.**	Outer Dia **Dış Çap**	Width **Genişlik**	Rim Thicknes **Göbek Kalınlığı**	Disc Thicknes **Kasnak Kalınlığı**	Suitable Tyre **Uygun Lastik**	Model **Model**
111242	7.00x16	**Çift Sekman / Zirai** Double Segment / Agri.	TT	6	160	205	406	178	7	5	9.00-16	E
111244-1	6.50x16	**Kombine** / Combined	TT	6	160	208	406	165	7	5	9.00-16	E
111245	7.00x16	**Çift Sekman / Zirai** Double Segment / Agri.	TT	6	160	205	406	178	10	5	9.00-16	E
111246	7.00x16	**Çift Sekman / Zirai** Double Segment / Agri.	TT	8	221	275	406	178	10	5	9.00-16	E
111247	6.50x16	**Dubleks / Zirai** Tubeless / Agri.	TL	6	160	205	406	165	7	5	9.00-16	H
111250	7.00x16	**Bombeli / Çift Sekman / Zirai** Convex / Double Segment / Agri.	TT	6	160	205	406	178	7	5	9.00-16	İ
111251	7.00x16	**Tam Kaynak / Çift Sekman / Zirai** Fully Welded/Double Segment/Agri.	TT	6	160	205	406	178	7	5	9.00-16	İ
111267	10.00x16	**Dubleks / Zirai** Tubeless / Agri.	TL	6	160	205	406	280	8	5	340/55-16	K
111270	13.00x17	**Dubleks / Zirai** Tubeless / Agri.	TL	6	160	205	432	330	10	5	15.0/55-17	K
111280	16.00x17	**Dubleks / Zirai** Tubeless / Agri.	TL	6	160	205	432	407	10	5	5.00/50-17 & 19.0/45-17	K
111281	16.00x17	**Dubleks / Zirai** Tubeless / Agri.	TL	8	221	275	432	407	10	5	5.00/50-17 & 19.0/45-17	K
111285	6.75x17.5	**Bombeli / Zirai** Convex / Agri.	TL	6	160	205	445	172	10	5	245/75 R17.5	İ
111286	6.75x17.5	**Dubleks / Zirai** Tubeless / Agri.	TL	6	160	205	445	172	10	5	245/75 R17.5	N
111287	6.00x17.5	**Dubleks / Zirai / Bombeli** Tubeless / Agri. / Convex	TL	6	160	205	445	152	10	5	215/75 R17.5	N
111288	6.00x17.5	**Dubleks / Zirai** Tubeless / Agri.	TL	6	160	205	445	152	10	5	215/75 R17.5	N
111292	10.00x18	**Dubleks / Zirai** Tubeless / Agri.	TL	6	160	205	457	254	10	5	12.5/80-18	K

TL Dubleks / *Tubeless*
TT İç Lastikli / *With Inner Tube*

111000

Jant / *Wheel Rim*

Lastik -Jant ölçüleri ETRTO (Avrupa Jant Lastik Teknik Organizasyonu) verilerine göre 5% Değişiklik gösterebilir.
Tyre and Rim dimension can variate ±%5 according to ETRTO (European Tyre and Rim Technical Organization)

Order Number **Sipariş No**	Rim Size **Jant Ebadı**	Type **Tipi**	Feature **Özellik**	Bolt Pcs. **Bijon Sayısı**	Center Hole **Porya Göbeği**	Bolt Center **Bijon Mer.**	Outer Dia **Dış Çap**	Width **Genişlik**	Rim Thicknes **Göbek Kalınlığı**	Disc Thicknes **Kasnak Kalınlığı**	Suitable Tyre **Uygun Lastik**	Model **Model**
111293	5.50x18	**Uzun / Bombeli** Long / Convex	TL	6	160	205	457	140	10	5	7.50-18	K
111297	7.50x19.5	**Dubleks / Zirai** Tubeless / Agri.	TL	8	221	275	495	191	10	5	285/70 R19.5	N
111298	14.00x19.5	**Dubleks / Zirai** Tubeless / Agri.	TL	8	221	275	495	356	10	7	435/50 R19.5	K
111298-1	14.00x19.5	**Dubleks / Zirai** Tubeless / Agri.	TL	6	160	205	495	356	10	7	435/50 R19.5	K
111300	14.00x19.5	**Dubleks / Zirai / 120 Ofset** Tubeless / Agri. / 120 Offset	TL	8	221	271	495	356	10	7	435/50-R19.5 285/70 R19.5	K
111301	14.00x19.5	**Dubleks / Zirai** Tubeless / Agri.	TL	10	281	335	495	356	10	7	435/50 R19.5	K
111303	7.50x19.5	**Dubleks / Zirai** Tubeless / Agri.	TL	6	160	205	495	191	10	5	285/70 R19.5	N
111310	7.00x20	**Çift Sekman / Zirai** Double Segment / Agri.	TT	6	160	205	508	178	7	5	9.00-20	L
111312	7.00x20	**Çift Sekman / Zirai** Double Segment / Agri.	TT	8	221	275	508	178	7	5	9.00-20	L
111330	7.00x20	**Bombeli / Çift Sekman / Zirai** Convex / Double Segment / Agri.	TT	6	160	205	508	178	7	5	9.00-20	İ
111332	7.00x20	**Bombeli / Çift Sekman / Zirai** Convex / Double Segment / Agri.	TT	8	221	275	508	178	7	5	9.00-20	İ
111334	13.00x20	**Dubleks / Zirai** Tubeless / Agri.	TL	8	221	275	508	330	10	6	16.0/70-20	İ
111337	9.00x22.5	**Dubleks** Tubeless	TL	10	281	335	572	229	10	6	12R/22.5	İ
111338	9.00x22.5	**Dubleks** Tubeless	TL	8	221	275	572	229	10	6	12R/22.5	İ
111339	16.00x22.5	**Dubleks** Tubeless	TL	8	221	275	572	406	10	6	5.50/60-22.5	N
111340	15.00x22.5	**Dubleks** Tubeless	TL	10	281	335	572	356	10	6	445/45 R22.5	N

TL Dubleks / *Tubeless*
TT İç Lastikli / *With Inner Tube*

111000
Jant / *Wheel Rim*

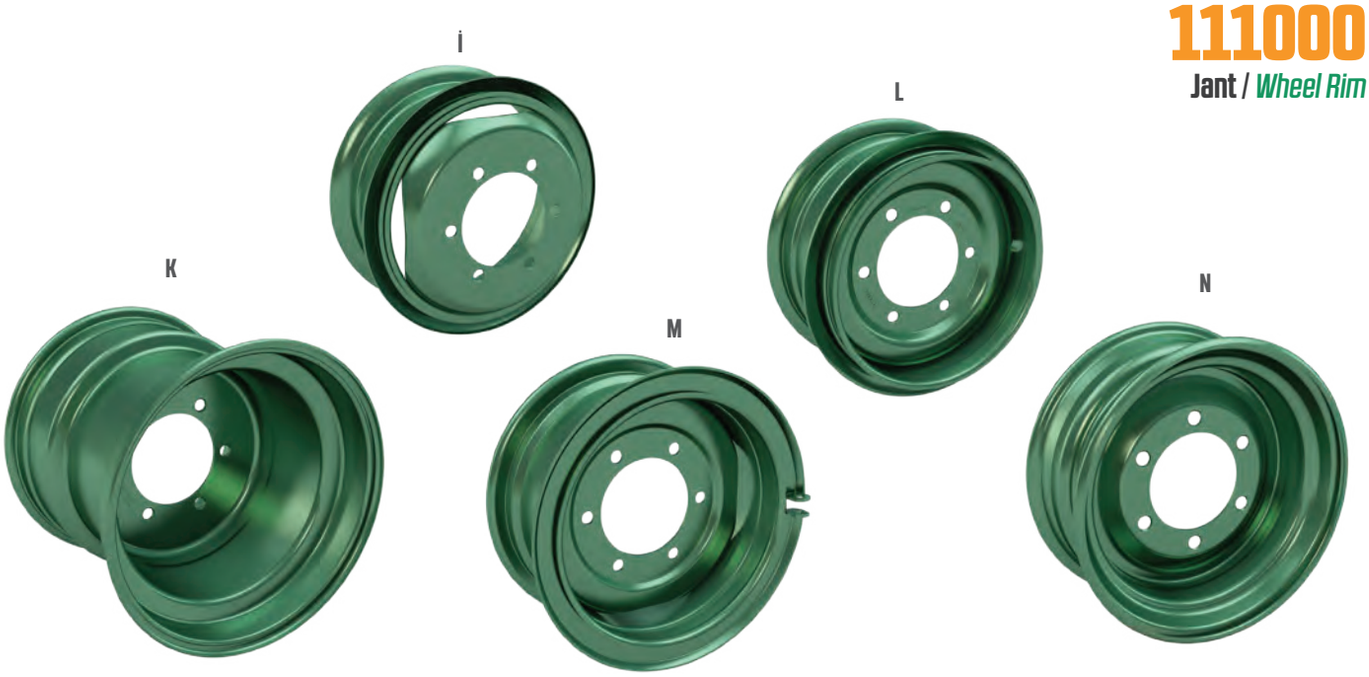

Lastik -Jant ölçüleri ETRTO (Avrupa Jant Lastik Teknik Organizasyonu) verilerine göre 5% Değişiklik gösterebilir.
Tyre and Rim dimension can variate ±%5 according to ETRTO (European Tyre and Rim Technical Organization)

Order Number **Sipariş No**	Rim Size **Jant Ebadı**	Type **Tipi**	Feature **Özellik**	Bolt Pcs. **Bijon Sayısı**	Center Hole **Porya Göbeği**	Bolt Center **Bijon Mer.**	Outer Dia **Dış Çap**	Width **Genişlik**	Rim Thicknes **Göbek Kalınlığı**	Disc Thicknes **Kasnak Kalınlığı**	Suitable Tyre **Uygun Lastik**	Model **Model**
111341	20.00x22.5	**Dubleks / Zirai** Tubeless / Agri.	TL	10	281	335	572	508	15	6	600/50-22.5	N
111341-1	20.00x22.5	**Dubleks / Zirai** Tubeless / Agri.	TL	8	221	275	572	508	15	6	600/50-22.5	N
111342	11.75x22.5	**Dubleks / Zirai** Tubeless / Agri.	TL	10	281	335	572	298	15	6	385/65 R22.5	N
111343	16.00x22.5	**Dubleks / Zirai** Tubeless / Agri.	TL	10	281	335	572	406	15	6	550/60-22.5	N
111344	9.00x22.5	**Bombeli/Dubleks / Zirai** Convex/Tubeless / Agri.	TL	10	281	335	572	229	10	6	12R/22.5 315/80-R22.5	İ
111345	11.75x22.5	**Dubleks / Zirai** Tubeless / Agri.	TL	8	221	275	572	298	10	6	385/65 R22.5	N
111346	7x32	**Dubleks / Zirai** Tubeless / Agri.	TL	5	110	160	813	178	10	6	230/95 R32 210/95 R32	-
111346-3	7x32	**Tam kaynak /** Full Welding	TL	5	110	160	813	178	10	6	230/95 R32 210/95 R32	
111346-4	7x32	**Tam kaynak /** Full Welding	TL	6	160	205	813	178	10	6	230/95 R32 210/95 R32	
111346-5	9x32	**Tam kaynak /** Full Welding	TL	6	160	205	813	229	10	6	270/95 R32	
111349	7x36	**Dubleks / Zirai** Tubeless / Agri.	TL	6	160	205	915	178	10	6	230/95 R36 210/95 R36	-
111360	7x44	**Dubleks / Zirai / Tam kaynak** Tubeless / Agri. / Full Welding	TL	6	160	205	1118	178	10	6	230/95 R44 210/95 R44	-
111360-1	7x44	**Dubleks / Zirai / Tam kaynak** Tubeless / Agri. / Full Welding	TL	8	221	275	1118	178	10	6	230/95 R44 210/95 R44	-
111360-2	8x44	**Dubleks / Zirai / Tam kaynak** Tubeless / Agri. / Full Welding	TL	8	221	275	1118	203	10	6	270/95 R44	-
111361	8x48	**Dubleks / Zirai / Tam kaynak** Tubeless / Agri. / Full Welding	TL	10	281	335	1220	203	10	6	230/95 R48 270/95 R48	-
111390	20x26	**Dubleks / Zirai** Tubeless / Agri.	TL	10	281	335	660	508	15	6	23.1-26	-
111450	9x54	**Dubleks / Zirai** Tubeless / Agri.	TL	10	281	335	1.372	229	10	6	270/95R54	-

TL **Dubleks** / *Tubeless*
TT **İç Lastikli** / *With Inner Tube*

112000
Lastik / *Tyre*

OL

TA 60

HL 10

PT 311

Lastik -Jant ölçüleri ETRTO (Avrupa Jant Lastik Teknik Organizasyonu) verilerine göre 5% Değişiklik gösterebilir.
Tyre and Rim dimension can variate ±%5 according to ETRTO (European Tyre and Rim Technical Organization)

Order Number **Sipariş No**	Tyre Size **Lastik Ebadı**	Brand **Marka**	Model **Model**	Type **Tip**	Layer **Kat**	Suitable Rim **Uygun Jant**	Outer Dia. **Dış Çap**	Width **Genişlik**	Speed (Max) **Hız (Max.)**	Load (Kg) **Yük (Kg)**	Group **Grup**
112002	350-6	Ithal	TA	TT	4	2.00x6	320	90	40	200	Zirai / Agriculture
112003	15x6.00-6	Ithal	Düz	TL	6	4.50x6	375	157	40	335	Zirai / Agriculture
112003-1	15x6.00-6	Ithal	Düz	Dolgu	-	4.50x6	375	157	40	390	Zirai / Agriculture
112003-2	13x5.00-6	Ithal	TA	Dolgu	4	4.50x6	335	120	20	200	Zirai / Agriculture
112003-3	15x6.00-6	Ithal	Düz	TL	6	4.50x6	375	157	20	250	Zirai / Agriculture
112005	335-75	Yerli	Düz Burçlu	Dolgu	-	Set	335	75	10	180	Zirai / Agriculture
112006	335-75	Yerli	Düz Rulmanlı	Dolgu	-	Set	335	75	10	180	Zirai / Agriculture
112009	4.00-8	Billas	TA	TL	4	4.00x8	414	120	25	300	Zirai / Agriculture
112010	4.00-8	Anlaş	PT311	TT	4	4.00x8	414	120	25	300	Zirai / Agriculture
112011	4.00-8	Anlaş	TA	TL	4	4.00x8	414	120	25	300	Zirai / Agriculture
112013	18x6.50-8	Ithal	Düz	TL	4	5.00x8	445	165	25	760	Zirai / Agriculture
112015	400-8	Anlaş	TA	TT	4	4.00x8	414	120	25	300	Zirai / Agriculture
112016	16.5x6.50-8	Anlaş	OL	TL	6	5.00x8	408	170	25	515	Zirai / Agriculture
112017	6.00-9	Petlas	HL10	TT	12	4.50x9	540	160	25	1.450	Zirai / Agriculture
112017-2	6.00-9	Ithal	HL10	Dolgu	-	4.50x9	540	160	25	1.450	Zirai / Agriculture
112020	6.50-10	Özka	HL10	TT	12	5.00x10	588	177	25	1.650	Zirai / Agriculture
112021	6.50-10	Petlas	HL10	TT	12	5.00x10	588	177	25	1.650	Zirai / Agriculture
122023	6.50-10	Ithal	HL10	Dolgu	-	5.00x10	588	177	25	1.800	Zirai / Agriculture

TL Dubleks / *Tubeless*
TT İç Lastikli / *With Inner Tube*

Kataloğumuzda yer almayan lastik ölçüleri ile ilgili firmamıza ulaşabilirsiniz.
Please get in contact with our company for tyre dimension not mentioned in the catalogue.

112000
Lastik / *Tyre*

TA

UN 5

PT 311

HL 10

Lastik -Jant ölçüleri ETRTO (Avrupa Jant Lastik Teknik Organizasyonu) verilerine göre 5% Değişiklik gösterebilir.
Tyre and Rim dimension can variate ±%5 according to ETRTO (European Tyre and Rim Technical Organization)

23,883 mm	Tyre Size	Brand	Model	Type	Layer	Suitable Rim	Outer Dia.	Width	Speed (Max)	Load (Kg)	Group
Sipariş No	**Lastik Ebadı**	**Marka**	**Model**	**Tip**	**Kat**	**Uygun Jant**	**Dış Çap**	**Genişlik**	**Hız (Max.)**	**Yük (Kg)**	**Grup**
112025	5.00-8	Petlas	HL10	TT	8	3.00x8	467	132	25	1.090	Zirai / Agriculture
112026	4.00-8	Yerli	OL	Dolgu	-	4.00x8	414	120	10	1.000	Zirai / Agriculture
112027	18x8.50-8	İthal	Düz	TL	4	5.00x8	455	210	20	750	Zirai / Agriculture
112028	4.00-8	İthal	HL10	Dolgu	-	4.00x8	455	210	20	1.000	Zirai / Agriculture
112029	4.00-8	Petlas	HL10	TT	8	4.00x8	455	210	20	670	Zirai / Agriculture
112041	7.00-12	Petlas	HL10	TT	14	5.50-12	672	192	25	2.120	Zirai / Agriculture
112042	7.00-12	Dolgu	HL10	TT	-	-	672	192	25	2.240	Zirai / Agriculture
112052	23x10.50-12	İthal	TA	TL	4	8.00-12	579	264	25	900	Zirai / Agriculture
112043	5.00x12	Anlaş	TA	TT	4	4.00-12	580	130	40	265	Zirai / Agriculture
112044	6.50/80-12	Anlaş	TA	TT	4	5.50-12	630	175	40	630	Zirai / Agriculture
112051	23x10.50-12	İthal	Düz	TL	4	8.00x12	579	264	25	1.000	Zirai / Agriculture
112046	5.00-10	Anlaş	TA	TT	4	4.50x10	517	146	40	375	Zirai / Agriculture
112049	5.00-10	İthal	Düz	TT	10	4.50x10	517	146	40	375	Zirai / Agriculture
112050	10.0/80-12	Petlas	UN5	TL	10	8.00x12	745	264	40	1.500	Zirai / Agriculture
112051	23x10.50-12	İthal	Düz	TL	8	8.00x12	580	260	20	950	Zirai / Agriculture
112052	23x10.50-12	İthal	TA	TL	8	8.00x12	580	260	20	950	Zirai / Agriculture
112054	23x10.50-12	İthal	TA	TL	8	8.00x12	585	216	20	950	Zirai / Agriculture
112055	20.5x8.00-10	İthal	Düz	TL	10	8.00x12	510	208	20	1.000	Zirai / Agriculture

TL Dubleks / *Tubeless*
TT İç Lastikli / *With Inner Tube*

Kataloğumuzda yer almayan lastik ölçüleri ile ilgili firmamıza ulaşabilirsiniz.
Please get in contact with our company for tyre dimension not mentioned in the catalogue.

112000
Lastik / *Tyre*

PT 311

PT 825

TA

TA 60

TD 16

Lastik -Jant ölçüleri ETRTO (Avrupa Jant Lastik Teknik Organizasyonu) verilerine göre 5% Değişiklik gösterebilir.
Tyre and Rim dimension can variate ±%5 according to ETRTO (European Tyre and Rim Technical Organization)

Order Number Sipariş No	Tyre Size Lastik Ebadı	Brand Marka	Model Model	Type Tip	Layer Kat	Suitable Rim Uygun Jant	Outer Dia. Dış Çap	Width Genişlik	Speed (Max) Hız (Max.)	Load (Kg) Yük (Kg)	Group Grup
112060	10.0/80-12	Petlas	TA	TL	6	8.00x12	745	264	40	750	Zirai / Agriculture
112062	10.0/80-12	Özka	UN1	TL	10	8.00x12	745	264	40	1.285	Zirai / Agriculture
112063	10.0/80-12	ÇAYIROVA	RM 6	TL	12 PR	8.00x12	745	264	40	1.700	Zirai / Agriculture
112071-2	195/50 R 13	İthal	PT 825	TL	-	6.00x13	525	195	140	960	Radyal / Radial
112075	165/80 R 13	Yerli / İthal	PT 311	TL	-	4.50x13	594	165	190	487	Radyal / Radial
112077	650/80-13	Anlaş	TA	TT	6	4.50x13	642	171	40	670	Zirai / Agriculture
112078	175/70 R 13	Yerli / İthal	PT 311	TL	-	4.50x13	576	177	190	450	Radyal / Radial
112079-1	175/70 R 14	Yerli / İthal	PT 311	TL	-	4.00x14	600	177	40	700	Zirai / Agriculture
112081	185 R 14 C	Yerli / İthal	PT 825	TL	8	5.50x14	650	188	190	850	Radyal / Radial
112082	185/65 R 14	Yerli / İthal	PT 311	TL	-	5.50x14	596	189	190	530	Radyal / Radial
112082-1	185/65 R 14	Yerli / İthal	PT 311	TL	-	4.00x14	596	189	190	530	Zirai / Agriculture
112083-1	185/55 R 14	Yerli / İthal	PT 311	TL	-	4.00x14	560	185	40	875	Zirai / Agriculture
112083-2	185/70 R 14	Yerli / İthal	PT 311	TL	-	4.00x14	615	185	40	900	Zirai / Agriculture
112086	175/65 R 14	Yerli / İthal	PT 311	TL	-	4.00x14	584	177	190	475	Radyal / Radial
112086-1	175/65 R 14	Yerli / İthal	PT 311	TL	-	4.00x14	584	177	190	750	Zirai / Agriculture
112087	195 R 14 C	Yerli / İthal	PT 311	TL	8	5.50x14	666	198	190	900	Radyal / Radial
112090	165/80 R 13	Yerli / İthal	PT 311	TL	-	4.00x13	594	165	40	800	Zirai / Agriculture
112091	500-15	Billas	TA	TT	6	3.50x15	657	140	40	550	Zirai / Agriculture
112092	650/80-15	Özka	TA	TT	6	4.50x15	663	163	40	750	Zirai / Agriculture
112093	650/80-13	Özka	TA	TT	6	4.00x13	642	171	40	670	Zirai / Agriculture

TL Dubleks / *Tubeless*
TT İç Lastikli / *With Inner Tube*

Kataloğumuzda yer almayan lastik ölçüleri ile ilgili firmamıza ulaşabilirsiniz.
Please get in contact with our company for tyre dimension not mentioned in the catalogue.

112000
Lastik / *Tyre*

PT 311

UN 3

UN 1

STB 3

HL 10

Lastik -Jant ölçüleri ETRTO (Avrupa Jant Lastik Teknik Organizasyonu) verilerine göre 5% Değişiklik gösterebilir.
Tyre and Rim dimension can variate ±%5 according to ETRTO (European Tyre and Rim Technical Organization)

23,883 mm Sipariş No	Tyre Size Lastik Ebadı	Brand Marka	Model Model	Type Tip	Layer Kat	Suitable Rim Uygun Jant	Outer Dia. Dış Çap	Width Genişlik	Speed (Max) Hız (Max.)	Load (Kg) Yük (Kg)	Group Grup
112095	195/65 R 15	Yerli / İthal	PT 311	TL	-	5.50x15	637	200	190	615	Radyal / Radial
112099	175/80 R14	Yerli / İthal	PT 311	TL	-	5.50x15	637	175	40	875	Zirai / Agriculture
112100	195/65 R15	Yerli / İthal	PT 311	TL	-	5.50x15	637	200	40	990	Zirai / Agriculture
112101	225/70 R 15C	Yerli / Ithal	PT 311	TL	8	7.00x15	697	228	190	1.120	Radyal / Radial
112102	235/75 R 15	Yerli / İthal	PT 311	TL	-	7.00x15	733	234	190	715	Radyal / Radial
112103	215/70 R 15C	Yerli / İthal	PT 311	TL	8	7.00x15	697	228	190	715	Radyal / Radial
112110	8.15-15	Özka	HL10	TT	14	7.00x15	707	216	40	3.000	Zirai / Agriculture
112111	8.15-15	Petlas	HL10	TT	14	7.00x15	707	236	40	3.000	Zirai / Agriculture
112120	8.25-15	Petlas	HL10	TT	14	7.00x15	836	234	40	3.250	Zirai / Agriculture
112130	10.0 / 75-15.3	Petlas	STB-3	TL	12	9.00x15.3	760	260	40	1.700	Zirai / Agriculture
112132	10.0/75-15.3	Özka	UN1	TL	12	9.00x15.3	760	260	40	1.700	Zirai / Agriculture
112136	10.0/75-15.3	Petlas	UN1	TL	12RF	9.00x15.3	760	260	40	1.700	Zirai / Agriculture
112137	10.0/75-15.3	CAYIROVA	UN1	TL	14	9.00x15.3	760	260	40	1.750	Zirai / Agriculture
112140	10.0/75-15.3	Petlas	TA	TL	12	9.00x15.3	760	264	40	1.200	Zirai / Agriculture
112145	10.0/75-15.3	Özka	TA	TL	12	9.00x15.3	760	264	40	1.700	Zirai / Agriculture
112147	260/70-15.3	Petlas	UN3	TL	12	9.00x15.3	753	268	40	2.000	Zirai / Agriculture
112148	260/70-15.3	Özka	UN3	TL	12	9.00x15.3	753	268	40	1.700	Zirai / Agriculture
112150	11.5/80-15.3	Petlas	UN1	TL	12RF	9.50x15.3	845	292	40	2.180	Zirai / Agriculture

TL Dubleks / *Tubeless*
TT İç Lastikli / *With Inner Tube*

Kataloğumuzda yer almayan lastik ölçüleri ile ilgili firmamıza ulaşabilirsiniz.
Please get in contact with our company for tyre dimension not mentioned in the catalogue.

112000
Lastik / *Tyre*

TD 16

TA 60

UN 1

NT 3

IMF 18

Lastik -Jant ölçüleri ETRTO (Avrupa Jant Lastik Teknik Organizasyonu) verilerine göre 5% Değişiklik gösterebilir.
Tyre and Rim dimension can variate ±%5 according to ETRTO (European Tyre and Rim Technical Organization)

Order Number Sipariş No	Tyre Size Lastik Ebadı	Brand Marka	Model Model	Type Tip	Layer Kat	Suitable Rim Uygun Jant	Outer Dia. Dış Çap	Width Genişlik	Speed (Max) Hız (Max.)	Load (Kg) Yük (Kg)	Group Grup
112152	11.5/80-15.3	Billas	UN1	TL	14	9.00x15.3	845	292	40	2.180	Zirai / Agriculture
112153	11.5/80-15.3	Petlas	TA	TL	12	9.50x15.3	845	292	40	1.550	Zirai / Agriculture
112154	11.5/80-15.3	Özka	UN1	TL	14	9.50x15.3	845	292	40	2.180	Zirai / Agriculture
112155	11.5/80-15.3	Özka	TA	TL	14	9.50x15.3	845	292	40	2.180	Zirai / Agriculture
112156	11.5/80-15.3	Petlas	NT3	TL	16	9.50x15.3	889	307	40	2.575	Zirai / Agriculture
112157	11.5/80-15.3	ÇAYIROVA	UN1	TL	16	9.50x15.3	845	292	40	2.650	Zirai / Agriculture
112160	12.5/80-15.3	Petlas	UN1	TL	12 RF	9.50x15.3	889	307	40	2.430	Zirai / Agriculture
112161	12.5/80-15.3	Petlas	IMF18	TL	16	9.50x15.3	889	307	40	2.800	Zirai / Agriculture
112162	12.5/80-15.3	Petlas	UN1	TL	16	9.50x15.3	889	307	40	2.800	Zirai / Agriculture
112165	12.5/80-15.3	Özka	TA60	TL	16	9.50x15.3	889	307	40	2.600	Zirai / Agriculture
112166	12.5/80-15.3	Özka	UN1	TL	14	9.50x15.3	889	307	40	2.600	Zirai / Agriculture
112167	12.5/80-15.3	Billas	UN1	TL	18	9.50x15.3	889	307	40	2.800	Zirai / Agriculture
112168	12.5/80-15.3	ÇAYIROVA	UN1	TL	18	9.50x15.3	889	307	40	2.800	Zirai / Agriculture
112176	400/60-15.5	Petlas	IMF18	TL	16	13.00x15.5	874	400	40	3.250	Zirai / Agriculture
112177	400/60-15.5	Petlas	IMF18	TL	18	13.00x15.5	874	400	40	3.875	Zirai / Agriculture
112179	4.00 / 60-15.5	Özka	IMF18	TL	18	13.00x15.5	874	400	40	3.875	Zirai / Agriculture
112180	6.00-16	Petlas	TD16	TT	6	4.00x16	735	165	40	560	Zirai / Agriculture

TL **Dubleks** / *Tubeless*
TT **İç Lastikli** / *With Inner Tube*

Kataloğumuzda yer almayan lastik ölçüleri ile ilgili firmamıza ulaşabilirsiniz.
Please get in contact with our company for tyre dimension not mentioned in the catalogue.

112000
Lastik / *Tyre*

PT 311

NB 37

PA 30

TD 16

TA 60

Lastik -Jant ölçüleri ETRTO (Avrupa Jant Lastik Teknik Organizasyonu) verilerine göre 5% Değişiklik gösterebilir.
Tyre and Rim dimension can variate ±%5 according to ETRTO (European Tyre and Rim Technical Organization)

Order Number **Sipariş No**	Tyre Size **Lastik Ebadı**	Brand **Marka**	Model **Model**	Type **Tip**	Layer **Kat**	Suitable Rim **Uygun Jant**	Outer Dia. **Dış Çap**	Width **Genişlik**	Speed (Max) **Hız (Max.)**	Load (Kg) **Yük (Kg)**	Group **Grup**
112182	6.00-16	Petlas	TA60	TT	6	4.00x16	735	165	40	560	Zirai / Agriculture
112184	6.00-16	CAYIROVA	TD16	TT	6	4.00x16	735	165	40	560	Zirai / Agriculture
112185	6.00-16	Özka	TD16	TT	6	4.00x16	735	165	40	560	Zirai / Agriculture
112186	6.00-16	Özka	TA60	TT	6	4.00x16	735	165	40	560	Zirai / Agriculture
112190	6.50-16	Petlas	TD16	TT	6	4.50x16	760	175	40	615	Zirai / Agriculture
112194	6.50-16	CAYIROVA	TD16	TT	6	4.50x16	760	175	40	615	Zirai / Agriculture
112195	6.50-16	Özka	TD16	TT	6	4.50x16	760	175	40	615	Zirai / Agriculture
112200	7.50-16	Petlas	TD16	TT	8	5.00/5.50x16	805	205	40	875	Zirai / Agriculture
112201	7.50-16	CAYIROVA	TD16	TT	8	5.00/5.50x16	805	205	40	875	Zirai / Agriculture
112203	7.50-16	Özka	TA60	TT	8	5.00/5.50x16	805	205	40	875	Zirai / Agriculture
112211	7.50-16	CAYIROVA	NB37	TT	12	5.00/5.50x16	803	216	40	1.450	Zirai / Agriculture
112216	7.50-16	CAYIROVA	NB37	TT	14	5.00/5.50x16	803	216	40	1.600	Zirai / Agriculture
112220	7.50-16	Petlas	NB37	TT	12	5.00/5.50x16	803	216	40	1.450	Zirai / Agriculture
112225	7.50-16	Özka	NB37	TT	12	5.00/5.50x16	803	216	40	1.450	Zirai / Agriculture
112230	7.50-16	Petlas	PA30	TT	12	5.00/5.50x16	803	216	40	1.450	Zirai / Agriculture
112233	215/75 R 16 C	Yerli/İthal	PT 311	TL	8	6.50x16	730	215	190	1.090	Radyal / Radial
112234	205/55 R 16	Yerli	PT 311	TL	12	5.50x15	632	205	210	615	Radyal / Radial

TL **Dubleks** / *Tubeless*
TT **İç Lastikli** / *With Inner Tube*

Kataloğumuzda yer almayan lastik ölçüleri ile ilgili firmamıza ulaşabilirsiniz.
Please get in contact with our company for tyre dimension not mentioned in the catalogue.

112000
Lastik / *Tyre*

NZ 300

UN 1

NT 30

NT 3

Lastik -Jant ölçüleri ETRTO (Avrupa Jant Lastik Teknik Organizasyonu) verilerine göre 5% Değişiklik gösterebilir.
Tyre and Rim dimension can variate ±%5 according to ETRTO (European Tyre and Rim Technical Organization)

Order Number Sipariş No	Tyre Size Lastik Ebadı	Brand Marka	Model Model	Type Tip	Layer Kat	Suitable Rim Uygun Jant	Outer Dia. Dış Çap	Width Genişlik	Speed (Max) Hız (Max.)	Load (Kg) Yük (Kg)	Group Grup
112235	340/55-16	Petlas	UN1	TL	12	11.00x16	780	343	40	2.500	Zirai / Agriculture
112240	9.00-16	Petlas	NT3	TT	12	7.00x16	881	247	40	1.650	Zirai / Agriculture
112241	9.00-16	Petlas	NT3	TT	16	7.00x16	881	247	40	1.900	Zirai / Agriculture
112242	9.00-16	Petlas/Dubleks	NT3	TL	12	7.00x16	881	247	40	1.650	Zirai / Agriculture
112243	9.00-16	Petlas	NT3	TT	14	7.00x16	881	247	40	1.800	Zirai / Agriculture
112245	9.00-16	Özka	NT3	TT	12	7.00x16	881	247	40	1.650	Zirai / Agriculture
112246	9.00-16	Özka	NT30	TT	14	7.00x16	881	247	40	1.800	Zirai / Agriculture
112247	9.00-16	Özka	NT3	TT	14	7.00x16	881	247	40	1.800	Zirai / Agriculture
112248	9.00-16	Petlas	NT30	TT	12	7.00x16	881	247	40	1.650	Zirai / Agriculture
112249	9.00-16	Petlas	NT30	TT	14	7.00x16	881	247	40	1.800	Zirai / Agriculture
112252	9.00-16	ÇAYIROVA	NT3	TT	14	7.00x16	881	247	40	1.800	Zirai / Agriculture
112254	9.00-16	ÇAYIROVA	NT30	TT	14	7.00x16	881	247	40	1.800	Zirai / Agriculture
112255	10.5/65-16	Petlas	UN-1	TT	10	7.00x16	775	274	40	1.550	Zirai / Agriculture
112256	9.00-16	Özka	NT30	TT	12	7.00x16	881	247	40	1.650	Zirai / Agriculture
112260	19.0/45-17	Petlas	UN1	TL	12	16.00x17	866	491	40	2.575	Zirai / Agriculture
112261	15.0/55-17	Petlas	UN1	TL	14	13.00x17	850	391	40	2.300	Zirai / Agriculture
112265-1	245/70 R 17.5	Yerli / İthal	NZ 300	TL	-	6.75x17.5	788	245	100	2.725	Radyal / Radial
112265-2	245/70 R 17.5	Petlas/Römork	NZ 300	TL	-	6.75x17.5	785	245	40	3.625	Zirai / Agriculture
112266	8.5 R 17.5	Petlas/Römork	NZ 300	TL	-	6.00x17.5	790	216	40	2.060	Radyal / Radial
112267	215/75 R 17.5	Yerli / İthal	NZ 300	TL	-	6.00x17.5	768	215	100	1.900	Radyal / Radial
112267-2	215/75 R 17.5	Petlas/Römork	NZ 300	TL	-	6.00x17.5	768	215	40	2.500	Zirai / Agriculture

TL Dubleks / *Tubeless*
TT İç Lastikli / *With Inner Tube*

Kataloğumuzda yer almayan lastik ölçüleri ile ilgili firmamıza ulaşabilirsiniz.
Please get in contact with our company for tyre dimension not mentioned in the catalogue.

112000
Lastik / *Tyre*

TA 60

NZ 300

UN 1

IND 15

HL 10

Lastik -Jant ölçüleri ETRTO (Avrupa Jant Lastik Teknik Organizasyonu) verilerine göre 5% Değişiklik gösterebilir.
Tyre and Rim dimension can variate ±%5 according to ETRTO (European Tyre and Rim Technical Organization)

Order Number Sipariş No	Tyre Size Lastik Ebadı	Brand Marka	Model Model	Type Tip	Layer Kat	Suitable Rim Uygun Jant	Outer Dia. Dış Çap	Width Genişlik	Speed (Max) Hız (Max.)	Load (Kg) Yük (Kg)	Group Grup
112268	235/75 R 17.5	Yerli / İthal	NZ 300	TL	-	6.75x17.5	797	235	100	2.250	Radyal / Radial
112270	500/50-17	Petlas	UN1	TL	14	16.00x17	932	500	40	3.250	Zirai / Agriculture
112270-1	500/50-17	Petlas	UN1	TL	18	16.00x17	932	500	40	4.125	Zirai / Agriculture
112271	225/70 R 17.5	Petlas	Düz - Kar	TL	12	6.00x17.5	797	235	40	2.725	Zirai / Agriculture
112272	235/75 R17.5	Petlas/Römork	NZ 300	TL	-	6.75x17.5	797	235	40	3.075	Zirai / Agriculture
112273	500/50-17	Özka	HL10	TL	18	16.00x17	932	500	40	4.125	Zirai / Agriculture
112281	12.5/80-18	Petlas	UN1	TT	14	9.00x18	965	308	40	2.800	Zirai / Agriculture
112282	7.50 - 18	Petlas	TA	TT	8	5.50 x18	860	205	40	950	Zirai / Agriculture
112291	12.5/80-18	Petlas	IND 15	TL	14	9.00x18	965	308	40	3.000	İş Makinesi
112295	13.0/65-18	Petlas	UN1	TL	14	11.00x18	890	336	40	2.575	Zirai / Agriculture
112301	285/70 R 19.5	Petlas	Römork	TL	-	7.50x19.5	900	280	40	4.000	Zirai / Agriculture
112302	265/70 R 19.5	Petlas	NZ 300	TL	-	7.50x19.5	876	260	100	2.725	Radyal / Radial
112302-1	265/70 R 19.5	Petlas	Römork	TL	-	7.50x19.5	876	260	40	3.650	Zirai / Agriculture
112303	435/50 R 19.5	Yerli / İthal	NZ 300	TL	-	14.00x19.5	930	435	100	4.500	Radyal / Radial
112304	285/70 R 19.5	Petlas	NZ 300	TL	-	7.50x19.5	902	280	100	2.900	Radyal / Radial
112306	285/70 R 19.5	Petlas/Römork	NZ 300	TL	-	7.50x19.5	902	280	65	3.350	Zirai / Agriculture
112307	245/70 R 19.5	Petlas	NZ 300	TL	-	7.50x19.5	838	245	130	2.300	Radyal / Radial
112308	245/70 R 19.5	Petlas	NZ 300	TL	-	7.50x19.5	838	245	40	3.450	Zirai / Agriculture
112309	245/75 R 16	Petlas	NZ 300	TL	-	6.50x16	774	245	40	2.650	Radyal / Radial

TL **Dubleks** / *Tubeless*
TT **İç Lastikli** / *With Inner Tube*

Kataloğumuzda yer almayan lastik ölçüleri ile ilgili firmamıza ulaşabilirsiniz.
Please get in contact with our company for tyre dimension not mentioned in the catalogue.

112000
Lastik / *Tyre*

FM RT

IND 15

PA 30

NZ 300

IMF 18

Lastik -Jant ölçüleri ETRTO (Avrupa Jant Lastik Teknik Organizasyonu) verilerine göre 5% Değişiklik gösterebilir.
Tyre and Rim dimension can variate ±%5 according to ETRTO (European Tyre and Rim Technical Organization)

Order Number Sipariş No	Tyre Size Lastik Ebadı	Brand Marka	Model Model	Type Tip	Layer Kat	Suitable Rim Uygun Jant	Outer Dia. Dış Çap	Width Genişlik	Speed (Max) Hız (Max.)	Load (Kg) Yük (Kg)	Group Grup
112311	825-20	Petlas	PA30	TT	14	5.50x20	950	224	40	2.000	Zirai / Agriculture
112314	16.0/70-20	Milestone / Petlas	IND 15	TL	16	13.00x20	1.097	418	40	4.000	İş Makinesi
112316	11.2-20	Özka	TA	TL	8	10.00x20	1.005	285	90	1.150	Zirai / Agriculture
112317	16.0/70-20	Petlas	UN9	TL	14	13.00x20	1.097	418	40	3.750	Zirai / Agriculture
112321	9.00-20	Petlas	PA30	TT	14	7.00x20	1.017	247	30	2.060	Zirai / Agriculture
112325	500/60-22.5	Petlas	IMF18	TL	16	15.00x22.5	1.172	503	40	4.900	Zirai / Agriculture
112326	315/60-22.5	Kaplama	Düz	TL	-	9.00x22.5	953	320	120	3.550	Radyal / Radial
112327	385/65 R 22.5	Yerli / İthal	NZ 300	TL	-	11.75x22.5	1.083	384	120	4.500	Radyal / Radial
112327-1	385/55-22.5	Yerli / İthal	NZ 300	TL	-	11.75x22.5	995	384	110	4.500	Radyal / Radial
112328	315/60 R 22.5	Yerli / İthal	NZ 300	TL	-	9.00x22.5	953	320	120	3.550	Radyal / Radial
112329	12 R 22.5	Yerli / İthal	NZ 300	TL	-	9.00x22.5	1.093	302	120	3.550	Radyal / Radial
112329-2	315/80 R 22.5	Yerli / İthal	NZ 300	TL	-	9.00x22.5	1.075	320	130	3.750	Radyal / Radial
112330	550/60-22.5	Petlas	IMF18	TL	16	16.00x22.5	1.232	537	40	5.150	Zirai / Agriculture
112330-1	560/60 R 22.5	İthal	FM RT	TL	-	16.00x22.5	1.244	550	40	5.925	Zirai / Agriculture
112331	550/60-22.5	Özka	IMF18	TL	16	16.00x22.5	1.232	537	40	5.150	Zirai / Agriculture
112333	550/45-22.5	İthal	IMF18	TL	16	16.00x22.5	1.066	550	40	4.375	Zirai / Agriculture
112334	275/70-R 22.5	İthal	NZ 300	TL	-	7.50x22.5	957	276	100	3.000	Ticari
112335	455/65-22.5	İthal	NZ 300	TL	-	14.00x22.5	1.066	550	40	4.375	Zirai / Agriculture
112336	500/45-22.5	İthal	IMF18	TL	-	15.00x22.5	1.022	500	40	3.000	Zirai / Agriculture
112337	560/45 R 22.5	İthal	FM RT	TL	-	16.00x22.5	1.076	560	40	3.900	Zirai / Agriculture

TL Dubleks / *Tubeless*
TT İç Lastikli / *With Inner Tube*

Kataloğumuzda yer almayan lastik ölçüleri ile ilgili firmamıza ulaşabilirsiniz.
Please get in contact with our company for tyre dimension not mentioned in the catalogue.

112000
Lastik / *Tyre*

TA

TA 60

FM RT

IMF 18

Lastik -Jant ölçüleri ETRTO (Avrupa Jant Lastik Teknik Organizasyonu) verilerine göre 5% Değişiklik gösterebilir.
Tyre and Rim dimension can variate ±%5 according to ETRTO (European Tyre and Rim Technical Organization)

Order Number **Sipariş No**	Tyre Size **Lastik Ebadı**	Brand **Marka**	Model **Model**	Type **Tip**	Layer **Kat**	Suitable Rim **Uygun Jant**	Outer Dia. **Dış Çap**	Width **Genişlik**	Speed (Max) **Hız (Max.)**	Load (Kg) **Yük (Kg)**	Group **Grup**
112339	700/50-22.5	İthal	IMF18	TL	16	24.00x22.5	1.270	700	40	6.700	Zirai / Agriculture
112340	600/50-22.5	Petlas	IMF18	TL	16	20.00x22.5	1.172	611	40	5.600	Zirai / Agriculture
112344	700/50-26.5	İthal	IMF18	TL	16	24.00x26.5	1.354	700	40	6.700	Zirai / Agriculture
112344-1	600/55-26.5	İthal	IMF18	TL	16	20.00x26.5	1.354	600	40	6.000	Zirai / Agriculture
112344-2	800/45-26.5	İthal	IMF18	TL	12	28.00x26.5	1.354	800	40	7.300	Zirai / Agriculture
112345	23.1-26	Petlas	TA	TL	18	20.00x26	1.605	587	30	4.625	Zirai / Agriculture
112348	23.1-30	Petlas	TA	TL	18	20.00x30	1.705	587	30	4.500	Zirai / Agriculture
112350	230/95 R 44	Petlas	TA	TL	-	7.00x44	1.568	230	40	2.000	Radyal / Radial
112351	210/95 R 32	Petlas	TA	TL	-	7.00x32	1.212	210	40	1.180	Radyal / Radial
112352	230/95 R 32	Petlas	TA	TL	-	7.00x32	1.250	230	40	1.700	Radyal / Radial
112353	210/95 R 44	Petlas	TA	TL	-	7.00x44	1.522	211	40	1.400	Radyal / Radial
112354	230/95 R 36	Petlas	TA	TL	-	7.00x36	1.358	230	40	1.800	Radyal / Radial
112355	210/95 R 36	Petlas	TA	TL	-	7.00x36	1.314	210	40	1.250	Radyal / Radial
112357	270/95 R 44	Petlas	TA	TL	-	9.00x44	1.632	275	40	2.500	Radyal / Radial
112358	270/95 R 48	Petlas	TA	TL	-	8.00x48	1.733	275	40	2.630	Radyal / Radial
112359	230/95 R 48	Petlas	TA	TL	-	8.00x48	1.662	230	40	1.050	Radyal / Radial
112361	270/95 R 32	Petlas	TA	TL	-	9.00x32	1.326	270	40	2.240	Radyal / Radial
112480	270/95 R 54	Petlas	TA	TL	-	9.00x54	1.890	275	40	2.880	Radyal / Radial
112482	300/95 R 46	Petlas	TA	TL	-	10.00x46	1.738	305	40	3.150	Radyal / Radial
112483	300/95 R 52	Petlas	TA	TL	-	10.00x52	1.891	305	40	3.450	Radyal / Radial

TL **Dubleks** / *Tubeless*
TT **İç Lastikli** / *With Inner Tube*

Kataloğumuzda yer almayan lastik ölçüleri ile ilgili firmamıza ulaşabilirsiniz.
Please get in contact with our company for tyre dimension not mentioned in the catalogue.

153230

Stop Lamba E-Belgeli

Rear Lamp E-Certificated

300x130mm

E

153231

Stop Lamba Üçgen Reflektörlü E-Belgeli

Rear Lamp With Triangle Reflector E-Certificated

240x140mm

E

153232

Stop Lamba Üçgen Reflektörlü Ledli Karavan E-Belgeli

Rear Lamp With Triangle Reflector Led Caravan E-Certificated

240x140mm

E

153501

Stop Lamba Yuvarlak Ledli 12 VOLT Ø 14 cm

Round Led Trailer Tail Light 12 VOLT Ø 14 cm

153004

Stop Lamba Kargo Boynuzlu

Trailer Rear Lamp With Led Marker

390x130mm

Order Number **Sipariş No**	Type **Tip**
153004	**Standart - Boynuzlu** Standard - With Marker
153006	**Standart** / Standard

153007

Stop Lamba Kargo

Trailer Rear Lamp

360x130mm

Order Number **Sipariş No**	Type **Tip**
153007	**E-Belgeli** E-Certificated
153008	**E-Belgeli-Boynuzlu** E-Certificated--With Marker

153005

Stop Lamba İş Makinesı Led 12V

Rear Lamp

200x90mm

153001

Stop Lamba Kamyon - Dorse Neon Led 12V

Led Trailer Rear Lamp With Triangle Reflector

210x90mm

153003

Stop Lamba Dorse Üçgen Reflektörlü

Trailer Rear Lamp With Triangle Reflector

420x140mm

153014

Stop Lambası Seti Tip Onay Uyumlu Reflektör - E Belgeli (Lamba - Üçgen - Şerit - Hız Limit - 12V - 7li Fiş)

Trailer Lighting System - E Certificated (Lamp - Triangle Reflector - Strip Speed Limit - 12V - 7 Pin Plug)

E

153009

Stop Lambası Seti 12V - E Belgeli

Trailer Lighting System 12V - E Certificated

Order Number Sipariş No	Type Tip
153009	**7li Fişli Erkek Kablolu** / 7 Pins Male With Cable
153011	**7li Fişli Erkek Kablolu Dağıtım Kutulu** 7 Pins Male With Cable and Junction Box
153012	**7li Fişli Dişi Kablolu Dağıtım Kutulu** 7 Pins Female With Cable and Junction Box

E

E

153013

Stop Lambası Seti 12V Küçük Kablolu 7li Fiş Erkek Ledli Mıknatıslı - E Belgeli

Trailer Led Lighting System 12V 7 Pins Male With Cable and Magnet - E Certificated

153335

Stop Lamba Süper Kargo Tipi 240x100mm

Rear Lamp Super Cargo Type 240X100mm

153002

Stop Lamba AS950

Rear Lamp

340x130mm

153052

Stop Lamba AS 250 4 Mercekli - 290x100mm

Rear Lamp AS 250 - 290x100mm

Order Number **Sipariş No**	Type **Tip**
153052	**Standart** / Standard
153053	**e Belgeli** / e Certificated

240 Tip /Type

153200

Stop Lamba 240 Tip 190x70mm

Rear Lamp - 240 Type 190x70mm

Order Number **Sipariş No**	Type **Tip**
153210	**240 Tip**/Type - **Standart** / Standard
153220	**240 Tip**/Type - **e Belgeli** / e Certificated

275 Tip /Type

153100

Stop Lamba 275 Tip 110x80mm

Rear Lamp 275 Type 110x80mm

Order Number **Sipariş No**	Type **Tip**
153110	**275 Tip**/Type - **Standart** / Standard
153120	**275 Tip**/Type - **e Belgeli** / e Certificated

153252

Lamba Ön Pozisyon Ledli

Front Position Lamp Led

E

153270

Stop Lamba Ledli

Rear Led Lamp

Order Number **Sipariş No**	Type **Tip**
153270	**Orta Model Boynuzlu 24V** Middle With Marker 24V
153271	**Orta Model Boynuzlu 12/24V 25cm Kablolu e Belgeli** Middle With Marker 12/24V 25cm Cable e-Certificated

E

153280

Lamba Yan Side Marker Duylu Tesisat - E9

Side Marker With Motion Control - E9

E

153281

Stop Lamba Yan Side Marker Ledli Braketli 12V - E Belgeli

Rear Lamp With Led Side Marker and Bracket 12V - E Certificated

E

153282

Stop Lamba Yan Side Marker Ledli 12V - E Belgeli

Rear Lamp With Led Side Marker 12V - E Certificated

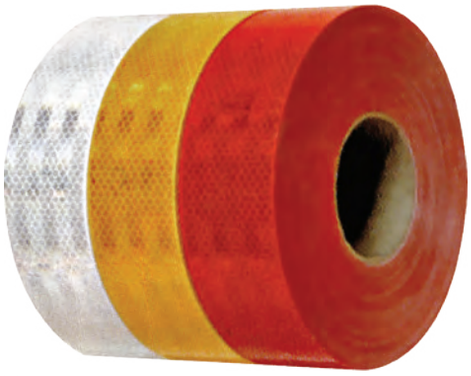

154380

Şerit Reflektör Sarı - Beyaz - Kırmızı / 50 mt

Strip Reflector Yellow - White - Red / 50 mt

Order Number Sipariş No	Type Tip
154400	**3M - Sarı 55 (mm) - Kalın - e Belgeli** / Yellow -55 (mm) - Thick - e-Certificated
154410	**3M - Beyaz 55 (mm) - Kalın - e Belgeli** / White -55 (mm) - Thick - e-Certificated
154420	**3M - Kırmızı 55 (mm) - Kalın - e Belgeli** / Red -55 (mm) - Thick - e-Certificated
154405	**MN TECH - Sarı 55 (mm) - Kalın - e Belgeli** / Yellow -55 (mm) - Thick - e-Certificated
154415	**MN TECH - Beyaz 55 (mm) - Kalın - e Belgeli** / White -55 (mm) - Thick - e-Certificated
154425	**MN TECH - Kırmızı 55 (mm) - Kalın - e Belgeli** / Red -55 (mm) - Thick - e-Certificated

154121

Reflektör Üçgen E Belgeli Ayaklı

Triangle Reflector With Support - E-Certificated

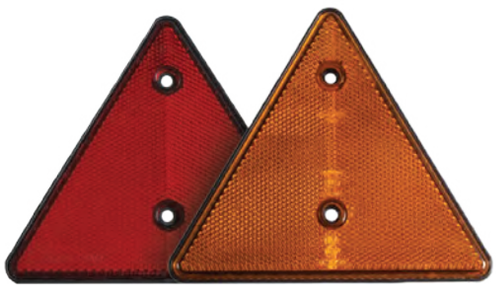

153600

Üçgen Fosfor 15 cm

Triangle Reflector 15 cm

Order Number Sipariş No	Type Tip
153600	**Üçgen Fosfor Kırmızı** Triangle Reflector Red
153601	**Üçgen Fosfor Sarı** Triangle Reflector Yellow
153602	**Üçgen Fosfor Kırmızı E-Belgeli** Triangle Reflector Red E-Certificated

153605

Dikdörtgen Fosfor

Rectangle Reflector

Order Number Sipariş No	Type Tip
153610	**Dikdörtgen Fosfor Beyaz** / Rectangle Reflector White
153611	**Dikdörtgen Fosfor Beyaz E-Belgeli** / Rectangle Reflector White E-Certificated
153620	**Dikdörtgen Fosfor Sarı** / Rectangle Reflector Yellow
153621	**Dikdörtgen Fosfor Sarı E-Belgeli** / Rectangle Reflector Yellow E-Certificated
153630	**Dikdörtgen Fosfor Kırmızı** / Rectangle Reflector Red
153631	**Dikdörtgen Fosfor Kırmızı E-Belgeli** / Rectangle Reflector Red E-Certificated

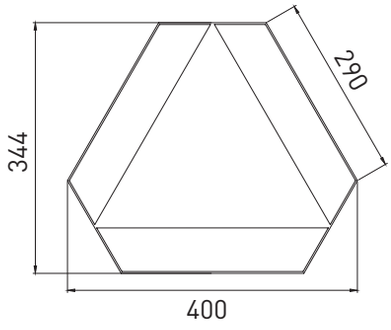

154100

Üçgen Reflektor e Belgeli

e-Certificated Triangle Reflector

Order Number Sipariş No	Type Tip
154110	A - Pakkens
154120	B

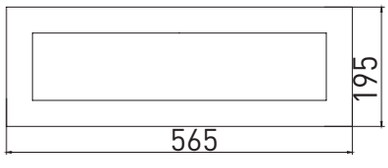

154200

Treyler Reflektör e Belgeli - 2 Adet

e-Certificated Trailer Reflector - 2 Pieces

Order Number Sipariş No	Type Tip
154250	A - Pakkens
154260	B

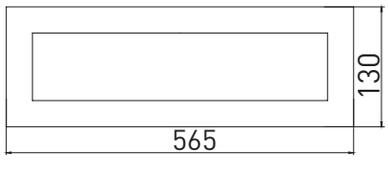

154300

Kamyon Reflektör e Belgeli - 2 Adet

e Certificated Truck Reflector - 2 Pieces

Order Number Sipariş No	Type Tip
154350	A - Pakkens
154360	B

154030

Reflektör E Belgeli 285x285mm

Reflector - E-Certificated 285x285mm

Talep olması halinde, en 141mm standart, boy ise 420mm e kadar e-belgeli olarak farklı ölçülerde yapılmaktadır.

On request, it can be supplied in various sizes up to a standard width of 141 mm and a height of 420 mm with E-certificate.

153250

Led Lamba
Led Lamp

Order Number Sipariş No	Type Tip
153250	**Lamba Led Kare Ok 34x30 12V** / Led Lamp Square Arrow 34x30 12V
153253	**Lamba Led Kare Ok 34x30 12V/24V** / Led Lamp Square Arrow 34x30 12V/24V
153251	**Lamba Led Yuvarlak Ok Ø30 12V/24V** / Led Lamp Round Arrow Ø30 12V/24V

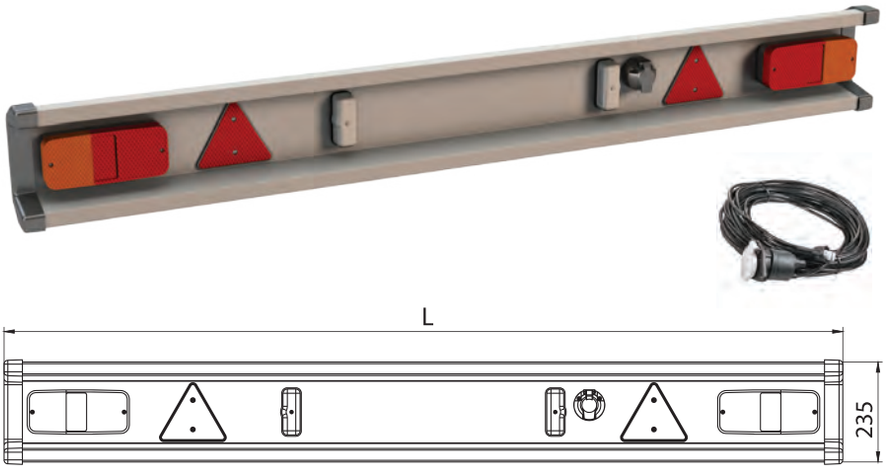

154630

Römork Tamponu - TÜV Tip
Trailer Buffer - TÜV Type

Length(mt) Boy (mt)	Thickness(mm) Kalınlık (mm)	Cable (mt) Kablo (mt)
1350	2	10
1500	2	10
1700	2	10
1950	2	10
2150	2	10
2300	2	10
2500	2	10

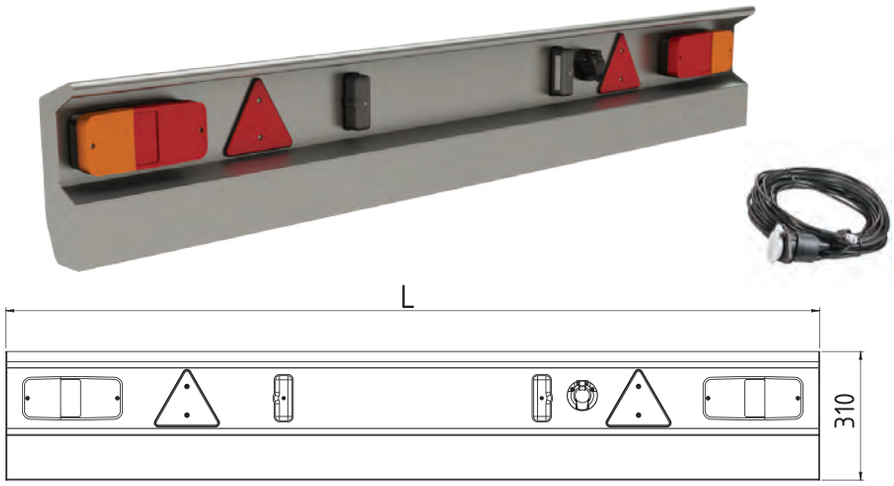

154640

Römork Tamponu - CYR Tip
Trailer Buffer - CYR Type

Length(mt) Boy (mt)	Thickness(mm) Kalınlık (mm)	Cable (mt) Kablo (mt)
1800	2	10
2000	2	10
2200	2	10

Tarım römorkları için galvanizli tampon sacı.
(Kablo, fış,lamba ve priz dahildir.)

Galvanized buffer sheet for agricultural trailers.
(Electric kit incl.)

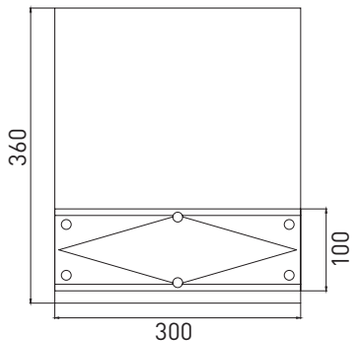

154600

Römork Tozluğu - 2 Adet
Trailer Spat - 2 Pieces

601100

Tarım Makine Disk Grubu
Agricultural Machinery Disc Group

Order Number **Sipariş No**	Diameter (mm) **Çap (mm)**	Hole Diameter (mm) **Göbek Çapı (mm)**	Model **Model**	Thickness (mm) **Kalınlık (mm)**	Description **Açıklama**
601101	460	**26 KARE - 28 YUVARLAK** / 26 Square - 28 Round	**Düz** / Plain	3.2	Disk / Disc
601105	460	**26 KARE - 28 YUVARLAK** / 26 Square - 28 Round	**Çentikli** / Notched	3.2	Disk / Disc
601110	460	**32 KARE** / 32 Square	**Düz** / Plain	3.2	Disk / Disc
601115	460	**32 KARE** / 32 Square	**Çentikli** / Notched	3.2	Disk / Disc
601201	510	**26 KARE / 28 YUVARLAK** / 26 Square - 28 Round	**Düz** / Plain	3.5	Disk / Disc
601205	510	**26 KARE / 28 YUVARLAK** / 26 Square - 28 Round	**Çentikli** / Notched	3.5	Disk / Disc
601210	510	**32 YUVARLAK** / 32 Round	**Düz** / Plain	3.5	Disk / Disc
601215	510	**32 YUVARLAK** / 32 Round	**Çentikli** / Notched	3.5	Disk / Disc
601220	510	**32 KARE** / 32 Square	**Düz** / Plain	3.5	Disk / Disc
601225	510	**32 KARE** / 32 Square	**Çentikli** / Notched	3.5	Disk / Disc
601230	510	**35-40 YILDIZ** / 35-40 Star	**Çentikli** / Notched	3.5	Disk / Disc
601301	560	**35 KARE** / 35 Square	**Düz** / Plain	4.3	Disk / Disc
601305	560	**35 KARE** / 35 Square	**Çentikli** / Notched	4.3	Disk / Disc
601307	560	**35-40 YILDIZ** / 35-40 Star	**Çentikli** / Notched	4.3	Disk / Disc
601310	560	**40 KARE** / 40 Square	**Düz** / Plain	4.3	Disk / Disc
601315	560	**40 KARE** / 40 Square	**Çentikli** / Notched	4.3	Disk / Disc
601319	560	**50 KARE** / 50 Square	**Düz** / Plain	4.3	Disk / Disc
601320	560	**50 KARE** /50 Square	**Çentikli** / Notched	4.3	Disk / Disc
601325	560	**50 ALTIKÖŞE** / 50 Hexagon	**Çentikli** / Notched	4.3	Disk / Disc
601330	560	**50 ALTIKÖŞE** / 50 Hexagon	**Düz** / Plain	4.3	Disk / Disc
601401	610	**40 KARE** / 40 Square	**Düz** / Plain	4.8	Disk / Disc
601405	610	**40 KARE** / 40 Square	**Çentikli** / Notched	4.8	Disk / Disc
601410	610	**35-40 YILDIZ** / 35-40 Star	**Çentikli** / Notched	4.8	Disk / Disc
601501	660	**40 KARE** / 40 Square	**Çentikli** / Notched	5.8	Disk / Disc
601505	660	**40 KARE** / 40 Square	**Düz** / Plain	5.8	Disk / Disc
601510	660	**35-40 YILDIZ** / 35-40 Star	**Çentikli** / Notched	5.8	Disk / Disc

154900
Kazayağı Pabuçları

Order Number **Sipariş No**	Description **Açıklama**
154901	Kazayağı 240x210x6
154902	Kazayağı 240x210x7
154903	Kazayağı 260x220x5
154904	Kazayağı 260x220x6
154905	Kazayağı 260x220x7
154906	Kazayağı 260x220x8
154907	Kazayağı 330x230x6
154908	Kazayağı 330x230x7 (33 cm Kısa)
154909	Kazayağı 330x230x7 (33 cm Uzun)
154910	Kazayağı Esener 330x230x10
154911	Kazayağı Panko 330x230x10
154912	Kazayağı Kulaklı 380x260x8
154913	Kazayağı Patlatma 260x220x7
154914	Kazayağı Patlatma 300x280x10
154915	Kazayağı Domuz Burnu 230x240x10
154916	Kazayağı Nizip Tipi 240x250x7
154917	Kazayağı Nizip Tipi 290x280x7
154918	Kazayağı Nizip Tipi Geniş Boyun 290x280x7
154919	Kırlangıç Pabucu 100x140x3,5
154920	Kırlangıç Pabucu 140x140x3,5
154921	Kırlangıç Pabucu Sol 120x140x3,5
154922	Kırlangıç Pabucu Sağ 120x140x3,5

154930
Patlatma ve Çizel Uçlar

Order Number **Sipariş No**	Description **Açıklama**
154931	Çizel Ucu 60x280x6
154932	Çizel Ucu 60x280x7
154933	Çizel Ucu 70x280x10
154934	Çizel Ucu 70x330x10
154935	Çizel Ucu 60x330x7
154936	Patlatma Bıçağı 330x10 mm
154937	Patlatma Bıçağı 330x12 mm
154938	Patlatma Bıçağı 360x12 mm
154939	Patlatma Bıçağı 390x12 mm
154940	Patlatma Bıçağı 390x15 mm
154941	Yılan Dili 43x215x6
154942	Yılan Dili 43x215x7
154951	Çayırbiçme Bıçağı 10 cm
154952	Çayırbiçme Bıçağı Kambur 10 cm
154953	Çayırbiçme Bıçağı Uzun Kambur 12,5 cm
154954	Çayırbiçme Bıçağı Eğri Sağ 10 cm
154955	Çayırbiçme Bıçağı Eğri Sol 10 cm
154956	Çayırbiçme Tutucu Sac
154957	Çayırbiçme Tutucu Sac Pimi
154961	Pulluk Bıçağı 8" / Alpler
154962	Pulluk Bıçağı 10" / Alpler
154963	Pulluk Bıçağı 12" / Alpler
154964	Pulluk Bıçağı 14" / Alpler
154965	Pulluk Bıçağı 16" / Alpler
154966	Pulluk Bıçağı 8" / Ünlü
154967	Pulluk Bıçağı 10" / Ünlü
154968	Pulluk Bıçağı 12" / Ünlü
154969	Pulluk Bıçağı 14" / Ünlü
154970	Pulluk Bıçağı 10 mm / Turan
154971	Pulluk Bıçağı 12 mm / Turan
154972	Pulluk Bıçağı 10 mm 4 Delikli / Turan
154973	Pulluk Bıçağı 12 mm 4 Delikli / Turan
154974	Parçalı Pulluk Burun / Ünlü
154975	Parçalı Pulluk Yan / Ünlü

154850

Kültivatör Bacağı 35x60

Cultivator Leg 35x60

154710

Döküm Bacak

Casting Lug

Order Number Sipariş No	Type Tip
154710	M 6 - 24 Kg. - 52 cm. - 80'lik
154720	M 5 - 31,5 Kg. - 64 cm. - 100'lük
154730	M 9 - 35,5 Kg. - 77 cm. - 100'lük
154740	M 7 - 53 Kg. - 90 cm. - 120'lik

Büyük / Big

Küçük / Small

Büyük / Big

Küçük / Small

154750

Goble Yatağı (İşlenmiş Bilyasız)

Gobble Bed (Wrought / No Ball)

Order Number Sipariş No	Type Tip
154760	**Küçük** / Small
154770	**Büyük** / Big
154780	**Makara Küçük** / Small Reel
154785	**Makara Büyük** / Big Reel

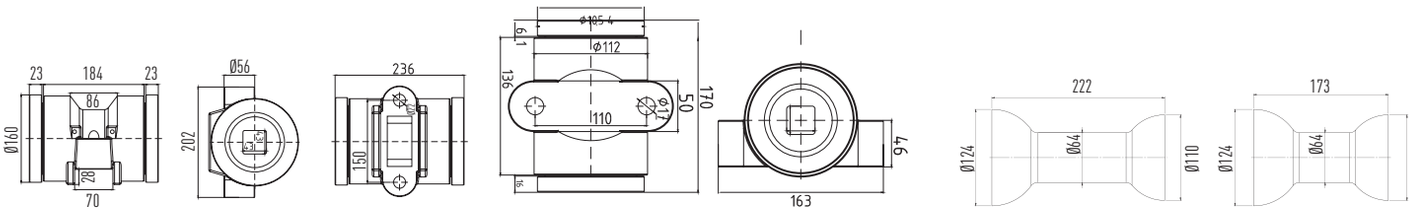

HAFİF RÖMORK EKİPMANLARI

UTILITY TRAILER COMPONENTS

ÇAYIROVA
Römork ve Treyler Ekipmanları

301000

Torsiyon Frenli Dingil (Fren Telli)

Braked Torsion Axle

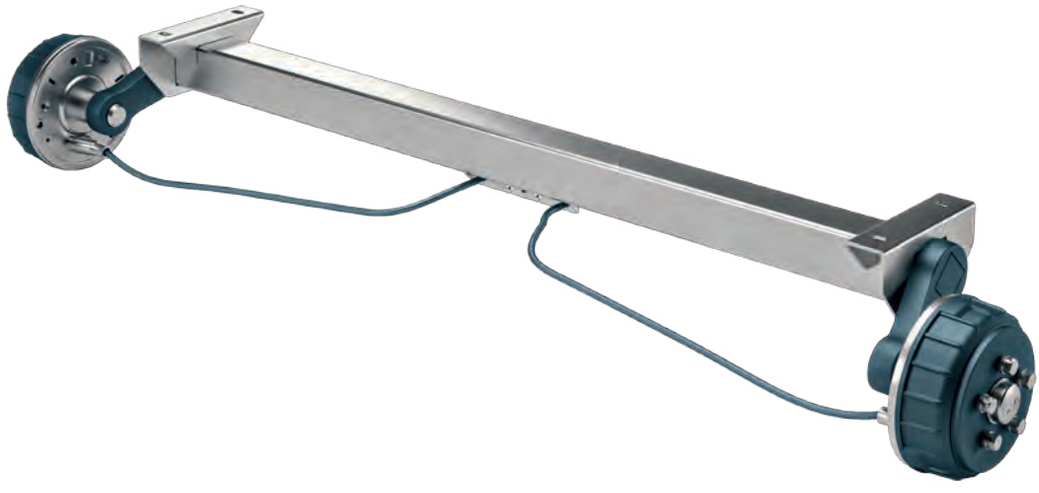

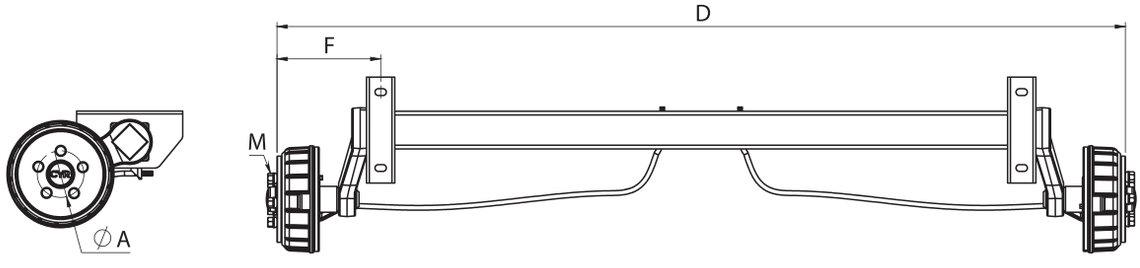

Order Number **Sipariş No**	Capacity (kg) **Kapasite (kg)**	Bolt **Bijon**	Bolt Center-A (mm) **Bijon Mrk.-A (mm)**	Tube **Profil**	Brake Lining (mm) **Balata (mm)**	**F (mm)**	**M (mm)**
301041	**900**	4	100	**60x60-3**	200x50	225	M12x1,5
301040	**1.050**	4	100	**60x60-3**	200x50	225	M12x1,5
301043	**1.050**	5	100	**60x60-3**	200x50	225	M12x1,5
301044	**1.350**	4	100	**80x80-4**	200x50	225	M12x1,5
301045	**1.350**	5	112	**80x80-4**	200x50	225	M12x1,5
301050	**1.750**	4	100	**80x80-4**	200x50	225	M12x1,5
301060	**1.750**	5	112	**80x80-4**	200x50	225	M12x1,5
301300	**1.500**	4	100	**80x80-4**	200x50	225	M12x1,5
301400	**1.500**	5	112	**80x80-4**	200x50	225	M12x1,5
301500	**1.800**	5	112	**80x80-4**	250x40	240	M12x1,5
301600	**2.500**	6	205	**80x80-4**	300x60	240	M18x1,5

İthal / *Imported*

Talep olması halinde, farklı iz boylarından dingil üretimi yapılabilmektedir.

On request, axles with different track lengths can be produced.

302000

Torsiyon Frensiz Dingil
Un-Braked Torsion Axle

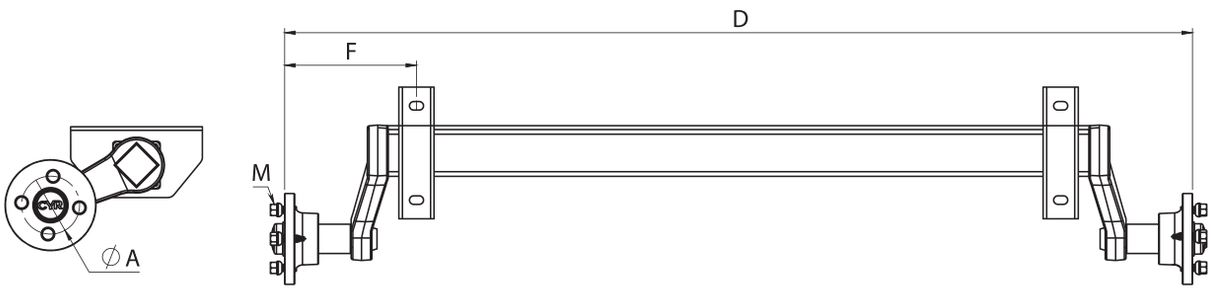

Order Number **Sipariş No**	Capacity (kg) **Kapasite (kg)**	Bolt **Bijon**	Bolt Center -A (mm) **Bijon Mrk. -A (mm)**	Tube **Profil**	**F (mm)**	**M (mm)**
302080	**750**	4	100	**60x60-3**	225	M12x1,5
302100	**1.050**	4	100	**60x60-3**	225	M12x1,5
302150	**1.050**	5	112	**60x60-3**	225	M12x1,5
302097	**1.350**	4	100	**80x80-4**	225	M12x1,5
302098	**1.350**	5	112	**80x80-4**	225	M12x1,5
302200	**1.750**	4	100	**80x80-4**	225	M12x1,5
302300	**1.750**	5	112	**80x80-4**	225	M12x1,5
302500	**2.000**	5	160	**80x80-4**	225	M16x1,5
302600	**2.500**	6	205	**80x80-4**	225	M18x1,5

Talep olması halinde, farklı iz boylarından dingil üretimi yapılabilmektedir.
On request, axles with different track lengths can be produced.

302050

Torsiyon Şase
Torsion Chassis

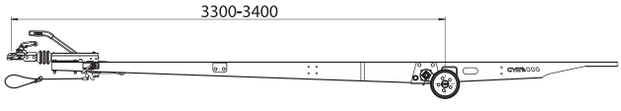

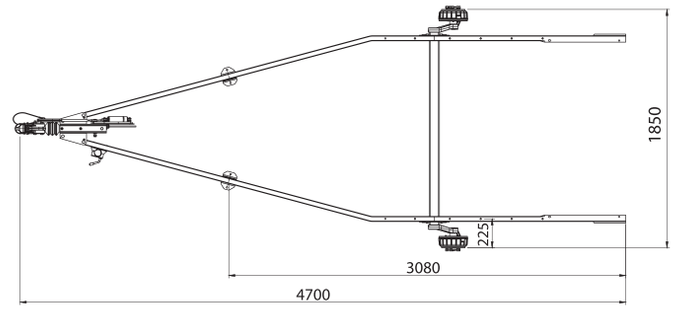

303920

Torsiyon Dingil Fren Teli
Torsion Axle Bowden Cable

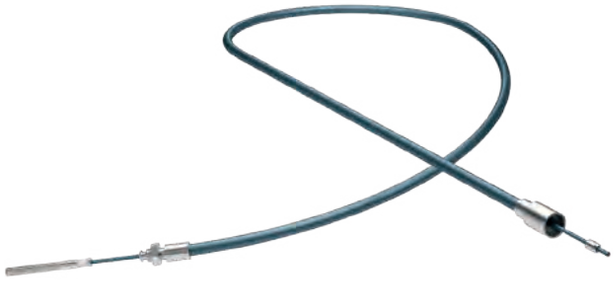

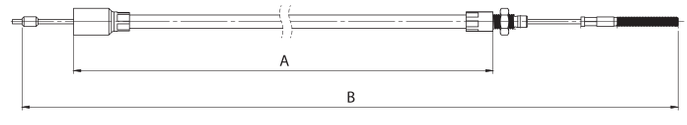

Order Number **Sipariş No**	Track Distance **İz Mesafesi**	Dimensions / **Ölçüler** (mm) **A**	 **B**
303925	**1.750 Altı** Up To 1.750	715	910
303920	1.750-2.300	1.065	1.260
303922	2.300-2.500	1.300	1.500

303930

Torsiyon Dingil Fren Teli Aparatı
Torsion Axle Adapter Bracket

Mono

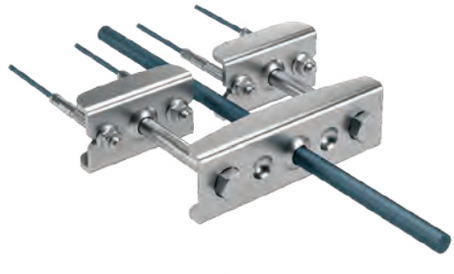

Tandem

Order Number **Sipariş No**	Type **Tip**
303935	Mono
303940	Tandem

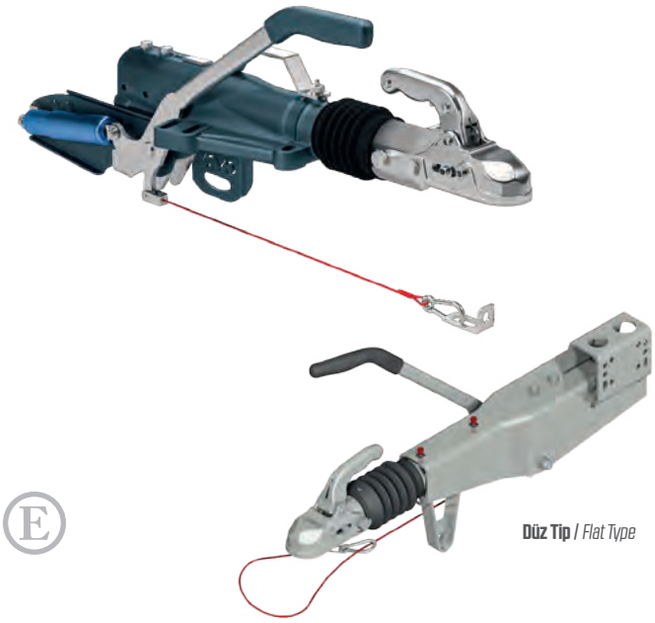

Düz Tip / *Flat Type*

309000

Frenli Kaplin e-Belgeli

e - Certificated Overrun Coupling With Brake

Order Number Sipariş No	Capacity (kg) Kapasite (kg)	Certificate No Belge No
309103	750	ECE R13 361-014-12
309101	1.400	ECE R13 361-014-12
309100	2.000	ECE R13 361-040-11
309110	2.700	ECE R13 11-0046-00
309150	3.000	ECE R13 361-0226-96
309200	3.500	ECE R13 361-013-07
309102	2.000	ECE R13 361-077-12
309300	2.000	ECE R13 A12-0001-00
309400	3.500	ECE R13 A12-0002-00

Düz Tip / *Flat Type*

Çayırova

310000

Kademeli Ok

Staged Towing Eye

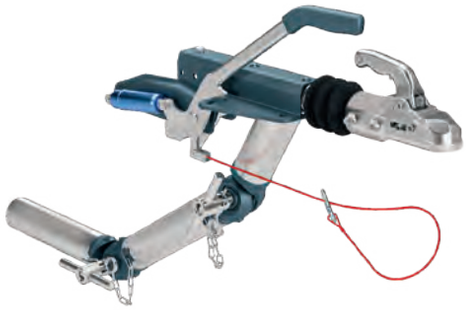

Order Number Sipariş No	Capacity (kg) Kapasite (kg)	Type Tip	Tube Profil
310015	1,750	**Frensiz - Ok Başılı - Orta Dişlili** Without Brake - With Towing Eye - Middle Gear	Ø 83
310020	3,000	**Frensiz - Ok Başılı - Büyük Dişlili** Without Brake - With Towing Eye - Big Gear	100x10
310050	1,750	**Frenli - Kaplinli / Ok - Orta Dişlili** With Brake - With Coupling - Middle Gear	Ø 83
310055	3,000	**Frenli - Kaplinli / Ok - Büyük Dişlili** With Brake - With Coupling - Big Gear	100x10

Büyük / Big

Orta / Middle

312000

Kademe Dişlisi ve Kolu

Stage Gear and Handle

Order Number Sipariş No	Product Ürün
312100	**Kademe Dişlisi Orta** / Middle Gear
312175	**Kademe Dişlisi Büyük** / Big Gear
312200	**Kademe Kolu Orta** / Middle Handle
312210	**Kademe Kolu Büyük** / Big Handle

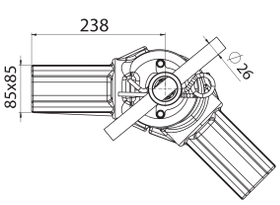

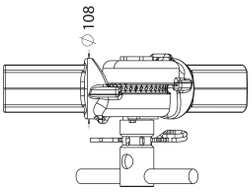

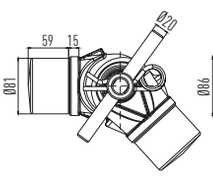

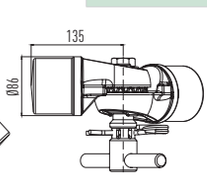

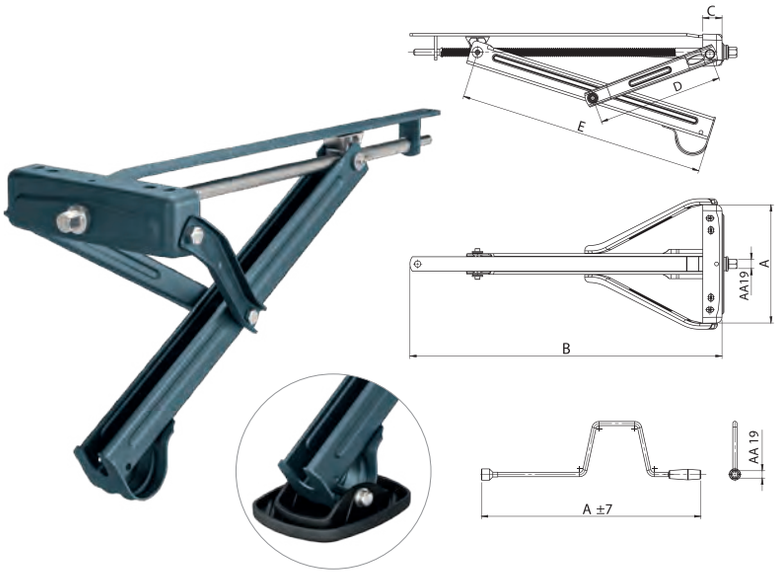

313500

Park Destek Krikosu Yeni Model

Parking Jack

Order Number Sipariş No	Type Tip	A	B	C	D	E
313500	**Kriko İthal /** Jack Imported	280	648	52	290	512
313501	**Kriko CYR /** Jack CYR	245	648	40	260	512

313505

Park Destek Kriko Kolu ve Ayağı

Parking Jack Handle and Leg

Order Number Sipariş No	Type Tip	A
313510	**Kol İthal /** Handle Imported	700
313511	**Kol CYR /** Handle CYR	580
313512	**Destek Ayağı Pabucu /** Support Leg Bracket	-

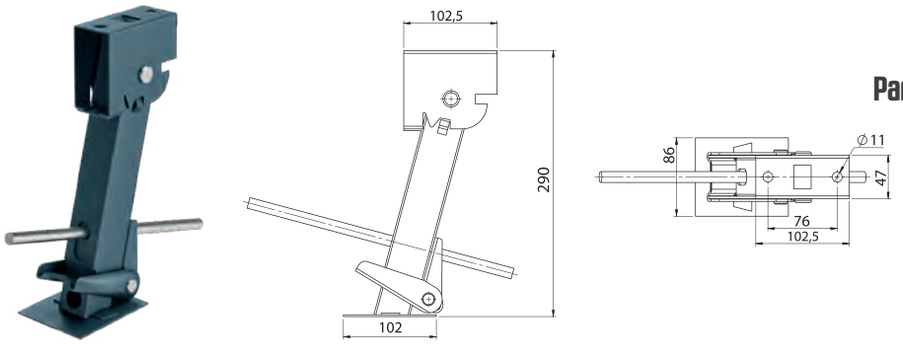

122439

Park Destek Krikosu 30cm Katlanabilir

Parking Jack 30 cm Foldable

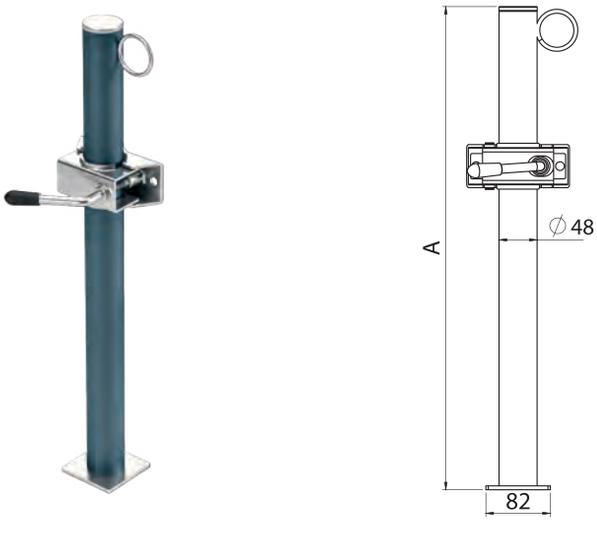

313520

Römork Köşe Destek Ayağı Kelepçeli

Corner Support Leg Clamp

Order Number Sipariş No	Boy / A (mm) Length / A (mm)
313521	610
313531	710

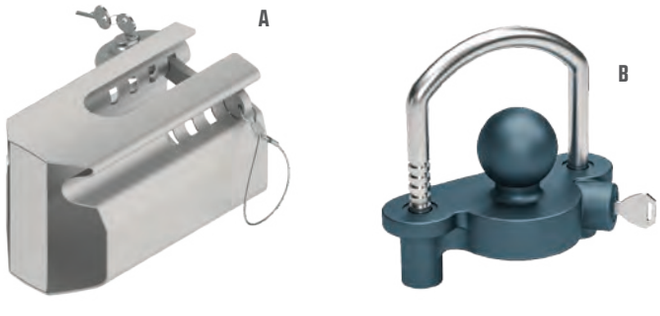

309210

Kaplin Kilidi

Coupling Lock

Order Number Sipariş No	Type Tip
309210	**Sabit** / Fixed (A)
309215	**Açılır-Kapanır** / Adjustable (A)
309220	**Topuzlu-Anahtarlı** / With Ball and Lock (B)

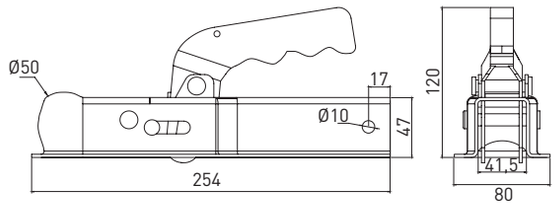

304100

Kaplin Kare
Square Coupling

Order Number **Sipariş No**	Capacity (kg) **Kapasite (kg)**	Type **Tip**	Certificate No **Belge No**
304110	1.100	**Belgesiz** / Wihout Certificate	
304120	1.100	**E-Belgeli** / E-Certificate	e11*94/20*6148*00

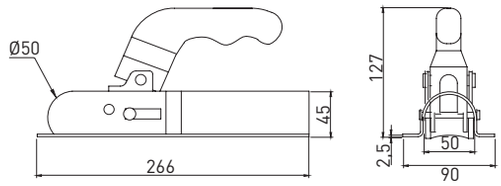

304200

Kaplin Kare e-Belgeli
e-Certificated Square Coupling

Order Number **Sipariş No**	Capacity (kg) **Kapasite (kg)**	Certificate No **Belge No**
304210	750	E1*55R-011040
304211	800	E57*55R01-02*0025*00
304220	1.400	E1*55R-010510

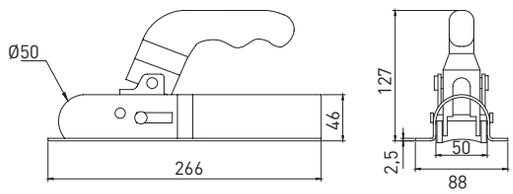

304300

Kaplin Yuvarlak e-Belgeli
e-Certificated Round Coupling

Order Number **Sipariş No**	Capacity (kg) **Kapasite (kg)**	Certificate No **Belge No**
304310	750	E1*55R-011040
304320	1.400	E1*55R-010510

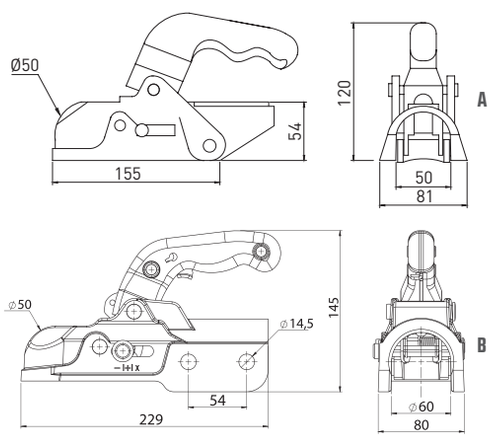

304400

Kaplin Döküm e-Belgeli
e-Certificated Coupling / Casting

Order Number **Sipariş No**	Capacity (kg) **Kapasite (kg)**	Certificate No **Belge No**	Model **Model**
304400	**3.500**	E1*55R-012121	A
304410	**3.500**	E1*55R02/00*2121*01	A
304450	**3.500**	E24*55R02/01*0599*00	B

Çayırova

304500

Kaplin Anti Yalpalama
Anti Wobble Device

Order Number **Sipariş No**	Type **Tip**
304500	**Anti Yalpalama 3000kg Ø 50mm (A)** Anti Wobble Device 3000kg Ø 50mm
304505	**Karavan Stabilizatör Anahtarı (B)** Caravan Stabilizer Lock

305100

Taksi Topuzu e-Belgeli

e-Certificated Towbar

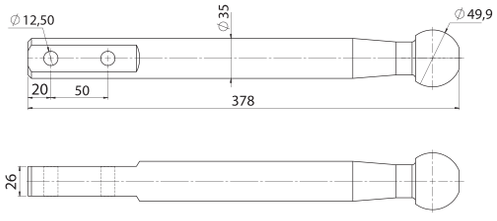

Order Number **Sipariş No**	Capacity **Kapasite**	Type **Tip**	Certificate No **Belge No**
305110	10 kN	**N1-M1 Uzun** / Long	e11*94/20*6147*00
305120	10 kN	**N1-M1 Kısa** / Short	e11*94/20*6147*00
305130	17 kN	M2-N2	e11*94/20*6326*00
305140	-	**Frezesiz** / Not Splined	**Belgesiz** / Without Certificate

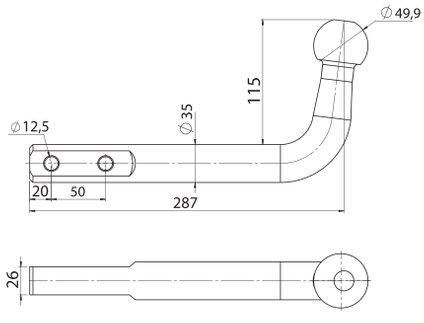

305200

Taksi Topuzu Eğik / Model 1

Swan Neck Towbar - Model 1

Capacity **Kapasite**	Certificate No **Belge No**
10 kN	e11*94/20*6147*00

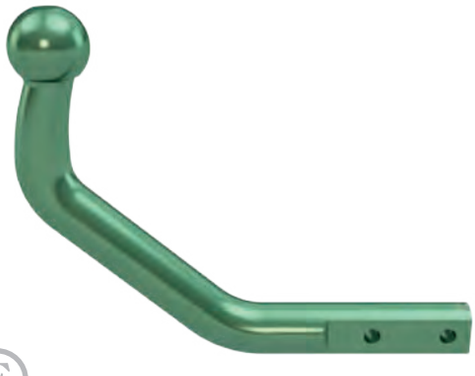

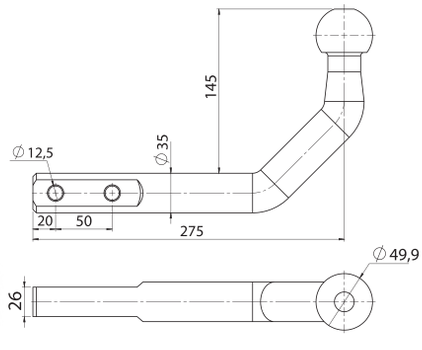

305300

Taksi Topuzu Eğik / Model 2

Swan Neck Towbar - Model 2

Capacity **Kapasite**	Certificate No **Belge No**
10 kN	e11*94/20*6147*00

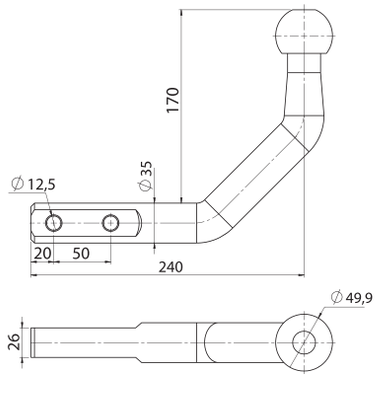

305400

Taksi Topuzu Eğik / Model 3

Swan Neck Towbar - Model 3

Capacity **Kapasite**	Certificate No **Belge No**
10 kN	e11*94/20*6147*00

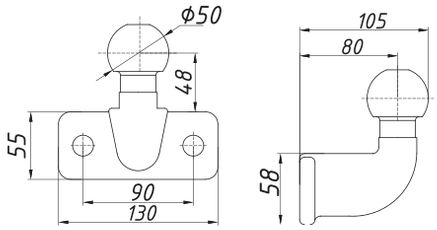

306100

Eğik Topuz e-Belgeli

e - Certificated Flanged Towball

Order Number **Sipariş No**	Capacity **Kapasite**	Certificate No **Belge No**
306100	18,5 kN	E11*55R01/06 11369*00
306200	-	**Standart** / Standard

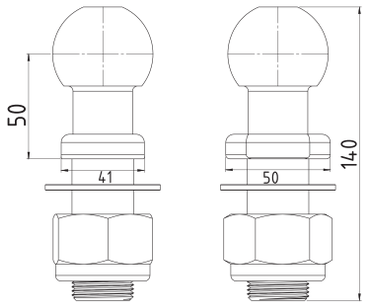

306300

Vidalı Topuz e-Belgeli

e - Certificated Towball With Nut

Order Number **Sipariş No**	Capacity **Kapasite**	Certificate No **Belge No**
306310	23,5 kN	e11*94/20*6763*00
306320	-	**Standart-Küçük /** Standard - Small

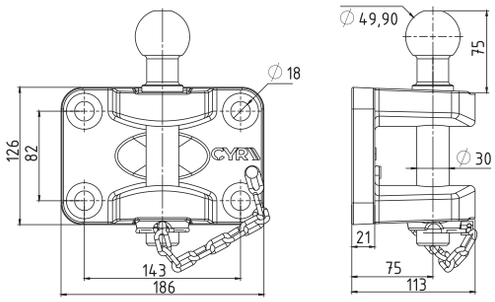

210600

Topuzlu Çeki Dört Delikli / e-Belgeli

e - Certificated Ball Hitch

Order Number **Sipariş No**	Capacity **Kapasite**	Certificate No **Belge No**
210610	23 kN	E11*55R01/06 11278*00
210620	-	**Standart-Küçük /** Standard - Small

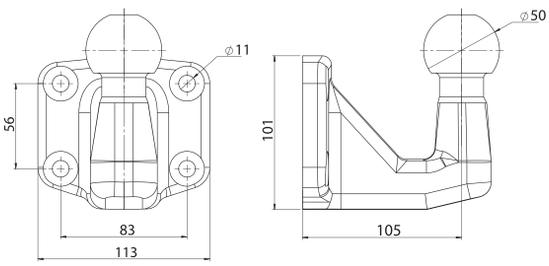

210606

Dört Delikli Eğik Çeki Topuzu - Büyük

Big Flanged Towball

Order Number **Sipariş No**	Capacity (Kg) **Kapasite (Kg)**
210606	3.500

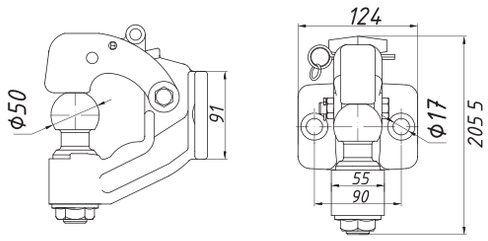

210700

Jeep Çekisi Topuzlu / e-Belgeli

Jeep Coupling - Ball / e - Certificated

	Order Number **Sipariş No**	Capacity **Kapasite**	Certificate No **Belge No**
2 Delikli / 2 Holes	**210700**	28 kN	E3*55R01*3015
4 Delikli / 4 Holes	**210705**	28 kN	E3*55R01*3042

124501

Ok Başı Nato Tipi Kare Model - E Belgeli

Nato Type Towing Eye Square Model - e-Certificated

Order Number **Sipariş No**	Capacity **Kapasite**	Certificate No **Belge No**
124501	125 kN	E1 55R - 01584

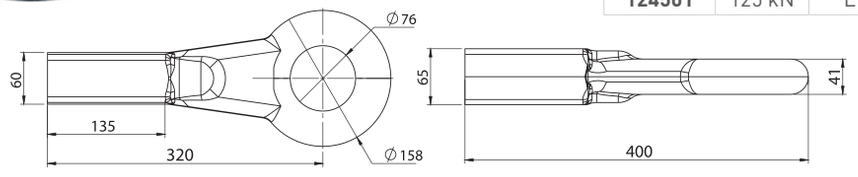

124502

Ok Başı Nato Tipi - E Belgeli

Nato Type Towing Eye - e-Certificated

Order Number **Sipariş No**	Capacity **Kapasite**	Type **Tip**	Certificate No **Belge No**
124502	31 kN	Q50 KHA30 İthal	E1 55R - 02124
124510	31 kN	**Küçük - Yerli** / Local - Product	

Çayırova

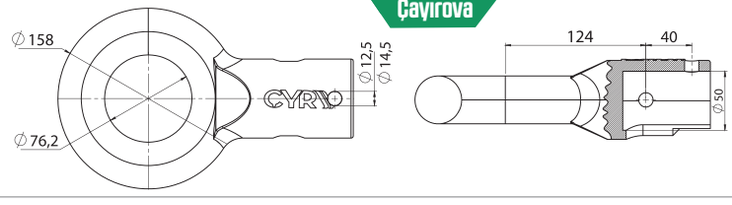

124503

Ok Başı Nato Tipi Ø 60 KHD35 - E Belgeli

Nato Type Towing Eye Ø 60 KHD35 e-Certificated

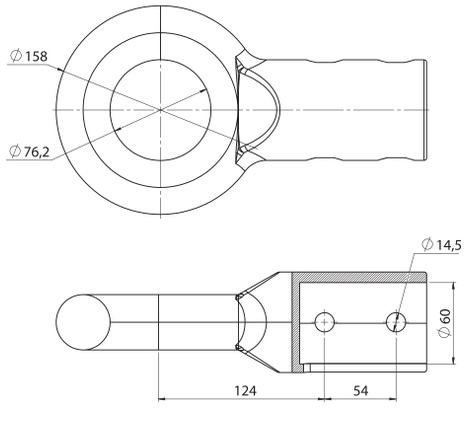

Order Number **Sipariş No**	Capacity **Kapasite**	Certificate No **Belge No**
124503	31 kN	E1 55R - 012123

207017

Ok Başı Civatalı 40mm - Ø 60mm - E Belgeli

Towing With Bolt 40 mm - Ø 60mm - E Certificated

Order Number **Sipariş No**	Capacity **Kapasite**	Certificate No **Belge No**
207017	31 kN	E1 55R - 01068

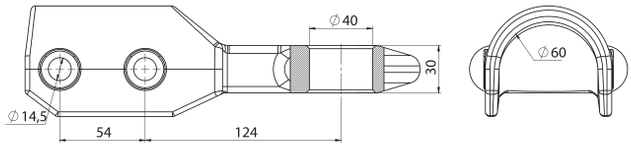

313100

Plastik Çamurluk
Plastic Mudguard

Order Number **Sipariş No**	A (mm)	B (mm)	C (mm)	Type **Tip**
313110	70	21	33	111 No'lu
313120	78	21	38	121 No'lu
313130	83	26	40	131 No'lu
212051	95	30	47	Üstü Düz

313200

Plastik Çamurluk - Tandem
Plastic Mudguard - Tandem

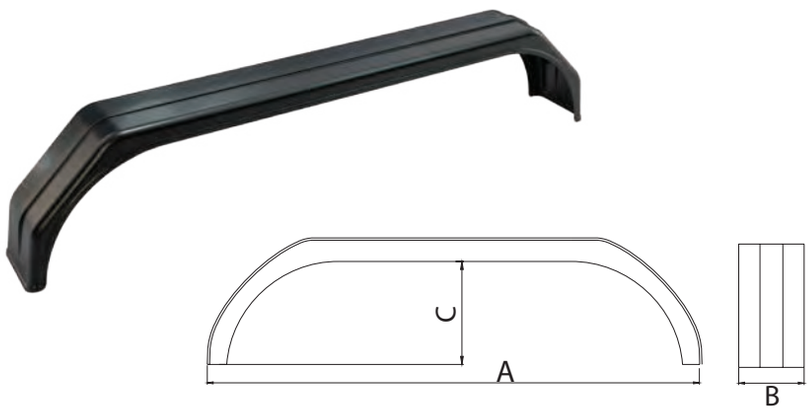

Order Number **Sipariş No**	A (mm)	B (mm)	C (mm)	Type **Tip**
313200	157	22	37	201 No'lu

313300

Galvanizli Çamurluk
Galvanized Mudguard

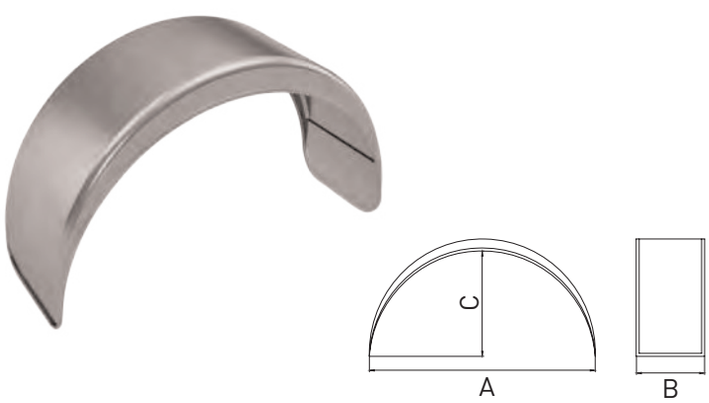

Order Number **Sipariş No**	A (mm)	B (mm)	C (mm)
313310	54	20	30
313320	65	21	35
313330	76	23	40
313340	80	24	45

313400

Galvanizli Çamurluk - Tandem
Galvanized Mudguard - Tandem

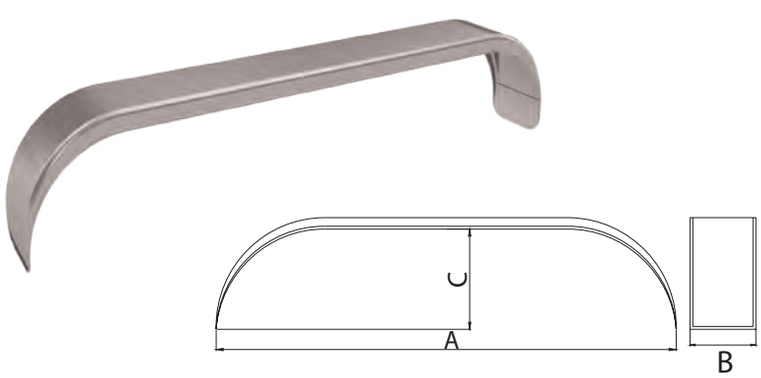

Order Number **Sipariş No**	A (mm)	B (mm)	C (mm)
313420	150	25	40

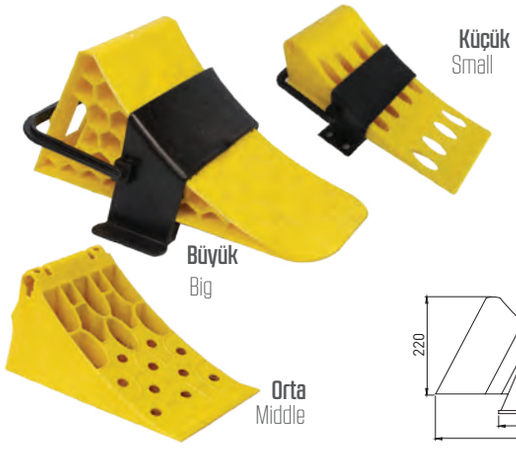

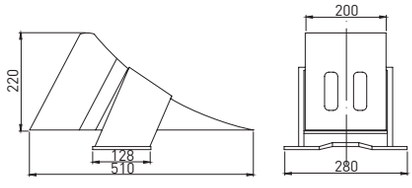

211750

Tekerlek Takozu (Plastik)

Wheel Chock (Polyethylene)

Order Number **Sipariş No**	Type **Tip**
211750	**Büyük - Askılıklı** Big Size Chock With Mounting Part
211751	**Orta** / Middle Size Chock
211752	**Küçük - Askılıklı** Small Size Chock With Mounting Part

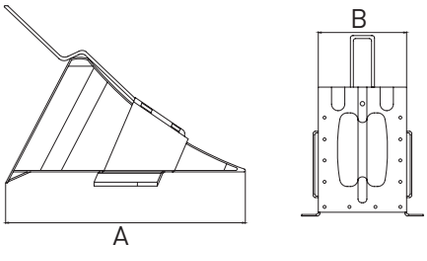

313700

Tekerlek Takozu

Wheel Chock

Order Number **Sipariş No**	Type **Tip**	A / B (mm) **A / B (mm)**
313700	**Sac Dayama Takozu İthal** Sheet Chock Imported	255/120
313701	**Sac Dayama Takozu Büyük** Sheet Chock Big	474/200
313702	**Sac Dayama Takozu Orta** Sheet Chock Middle	374/160
313703	**Sac Dayama Takozu Küçük** Sheet Chock Middle Small	310/120

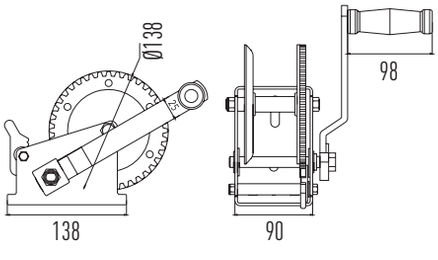

313800

El Vinci

Hand Winch

Order Number **Sipariş No**	Capacity Kg **Kapasite Kg.**	Type **Tip**
313820	540	**Frensiz** / Without Brake
313830	650	**Frenli** / With Brake
313840	720	**Frenli** / With Brake
313845	900	**Frenli** / With Brake
313860	900	**Frensiz** / Without Brake
313870	1.000	**Halatlı - Gerdirme** / Rope Stretching
313880	2.000	**Halatlı - Gerdirme** / Rope Stretching

313800
Araç Vinci
Vehicle Winch

Order Number Sipariş No	Capacity Kg Kapasite Kg.	Type Tip
313875	910	**2000LB 12V Kumandalı** 2000LB 12V Remote Control
313885	1.820	**4000LB 12V Kumandalı** 4000LB 12V Remote Control

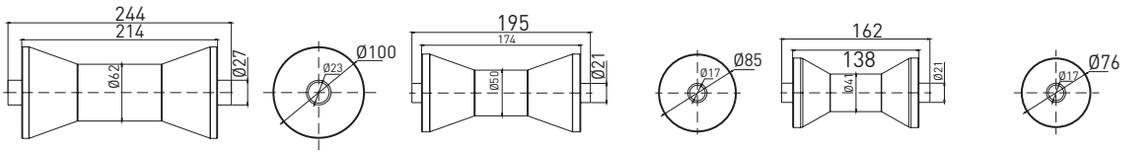

313900
Oval Makara Takozlar
Round Buffer

Order Number Sipariş No	Type Tip
313910	15 cm
313920	20 cm
313930	25 cm

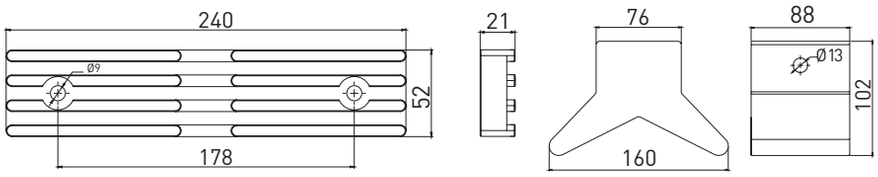

313950
V Takozlar
V Buffer

Order Number Sipariş No	Type Tip
313951	**Küçük** / Small
313952	**Büyük** / Big

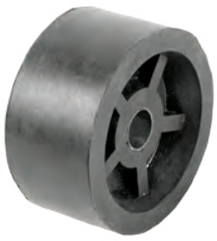

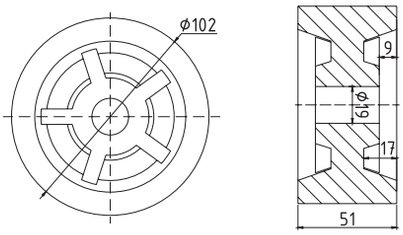

313960
Yan Dayama Rulosu
Side Buffer

Kablolu Set-Dişi

Dişi

Erkek

313980

Elektrik Kiti
Electric Kit

Order Number Sipariş No	Type Tip
313981	**Elektrik Fişi 5 Soketli - Erkek /** Male
313982	**Elektrik Fişi 5 Soketli - Dişi /** Female
313984	**Kablolu Set - Dişi /** Female Mounted Set
304016	**Elektrik Fişi 7 Soketli -** Erkek / Male
304017	**Elektrik Fişi 7 Soketli - Dişi /** Female
313988	**Elektrik Kablosu 2*1 /** Cable
313989	**Elektrik Kablosu 3*1 /** Cable
313983	**Elektrik Fiş Kablosu 4*1 /** Cable
304012	**Elektrik Fiş Kablosu 5*1 /** Cable
313986	**Elektrik Fiş Kablosu 7*1 /** Cable
313987	**Elektrik Fiş Kablosu 7*1,5 /** Cable

313998

Elektrik Kablo
Electrical Cable

Order Number Sipariş No	Type Tip
313998	**Çift Fişli 7 Soketli Erkek - Erkek Düz 2,5m 12V** Electrical Cable 7 Pin Plug Straight Male - Male 2,5m 12V
313996	**Çift Fişli 7 Soketli Erkek - Erkek Spiral 7m 12V** Electrical Cable 7 Pin Plug Spiral Male - Male 7m 12V
313997	**Çift Fişli 7 Soketli Erkek - Erkek Spiral 4m 12V** Electrical Cable 7 Pin Plug Spiral Male - Male 4m 12V

313995

Elektrik Fişi 12 Soketli Erkek - Dişi Spiral Kablo 24V
Electric Plug

314000

Çeki Demiri Profili - Tip Onay Belgeli
Certificated Towbar Profile

Topuz Dahil / *With Drawbar*

E

Tüm araç modellerine uygun e-belgeli çeki demirleri için lütfen müşteri temsilcinizden fiyat alınız.

ÇAYIROVA
Römork ve Treyler Ekipmanları

YEDEK PARÇA

SPARE PARTS

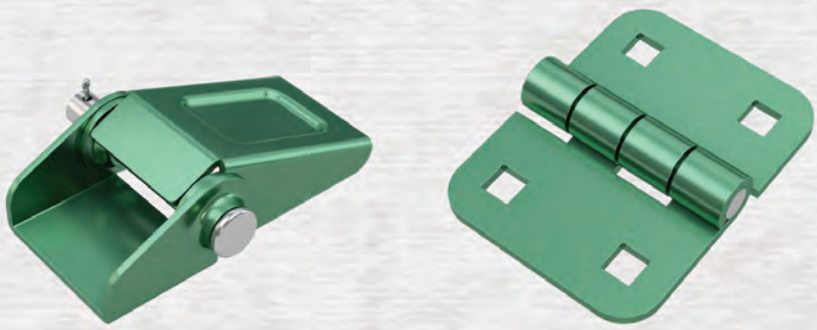

155000

Baba Erkek

Big Anti-Loose catch (Female)

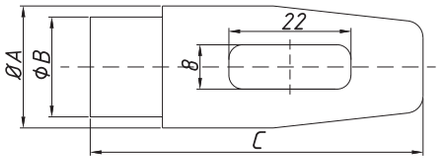

Order Number **Sipariş No**	Type **Tip**	A (mm)	B (mm)	C (mm)
155010	**Baba Erkeği** Big Anti-Loose catch	22	18	54
155015	**Baba Erkeği Yuvarlak** Big Round Anti-Loose catch	22	18	54
155020	**Damper Erkeği Kısa** Short Dumper Anti-Loose catch	24	22	63
155030	**Damper Erkeği Uzun** Long Dumper Anti-Loose catch	24	22	82

155100

İlave Erkek

Small Anti-Loose catch

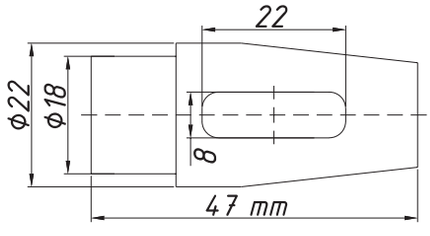

155200

Uzun Erkek

Long Anti-Loose catch

Order Number **Sipariş No**	A (mm)	B (mm)
155205	22	80
155210	22	100
155220	22	140

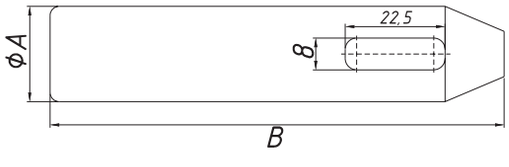

155300

Kalıp Erkeği

Special Anti-Loose catch

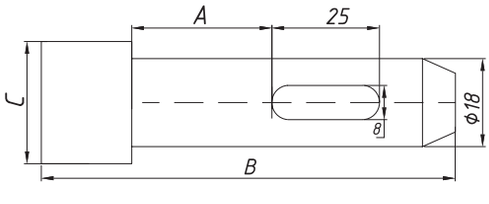

Order Number **Sipariş No**	A (mm)	B (mm)	C (mm)
155310	5	55	22

156000

Tekli Zincirli Çivi
Anti-Loose Catch With Chain (Male)

Order Number **Sipariş No**	Type **Tip**
156010	**Standart** / Standard
156020	**Yuvarlak** / Cicular
156018	**Sementeli** / With Sementel

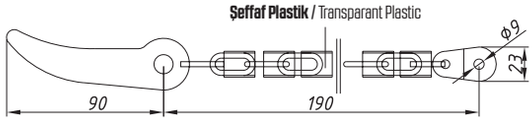

156100

Tekli Kilitli Zincirli Çivi
Anti-Loose Catch With Chain & Lock

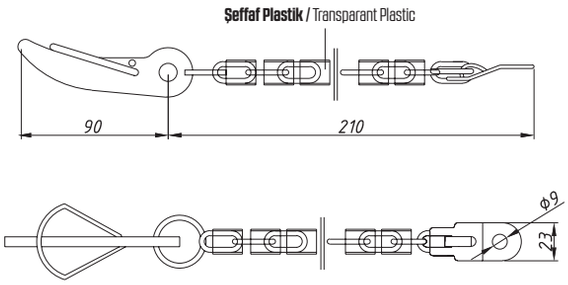

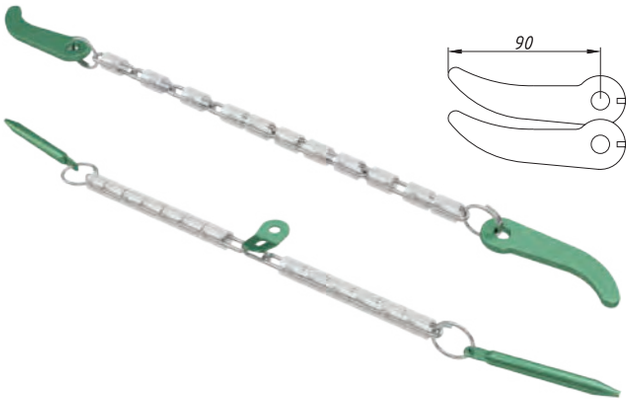

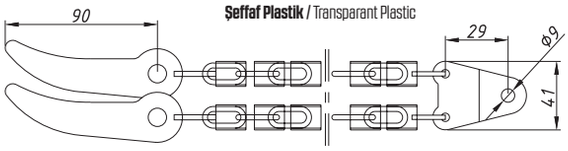

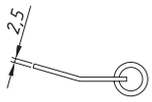

156200

Çiftli Zincirli Çivi
Double Anti-Loose Catch With Chain

Order Number **Sipariş No**	Type **Tip**
156210	**Standart** / Standard
156220	**Yuvarlak** / Cicular
156218	**Sementeli** / With Sementel

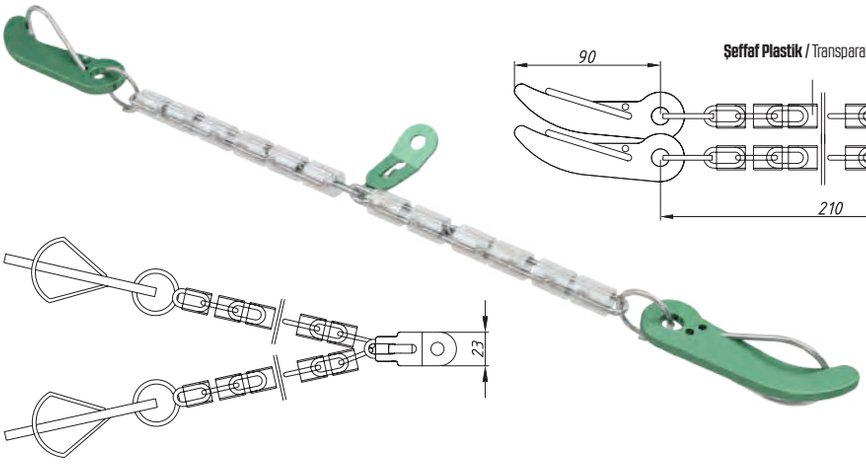

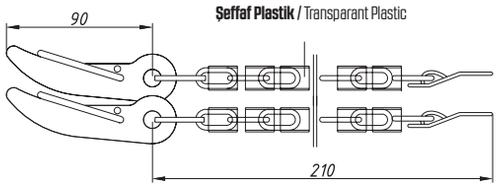

156300

Çiftli Kilitli Zincirli Çivi
Double Anti-Loose Catch With Chain & Lock

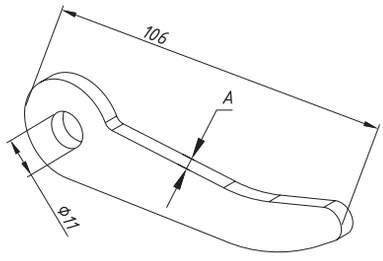

156400

Çivi

Anti-Loose Catch (Male)

Order Number **Sipariş No**	Thickness-A **Kalınlık-A**
156410	5 mm
156420	5 mm **Galvanizli** / Galvanized
156430	6 mm
156440	6 mm **Galvanizli** / Galvanized

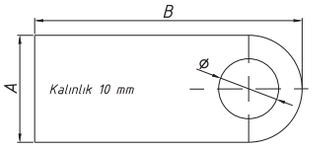

156500

Kapak Laması

Cover Sheet

Order Number **Sipariş No**	A / Type **A / Tip**	A (mm)	Ø (mm)
156510	40/10	127	25
156525	50/8	127	28
156530	50/10	127	28
156540	50/10 **Kısa** / Short	105	28
156545	50/10	115	28
156560	60/10	127	28

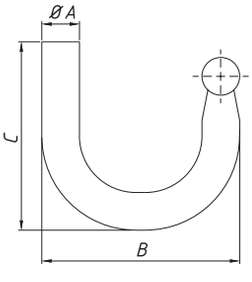

156600

Kanca Yuvarlağı

Round Hook

Order Number **Sipariş No**	A (mm)	B (mm)	C (mm)
156610	8	45	45
156620	10	47	50
156630	12	55	60
156640	14	70	65

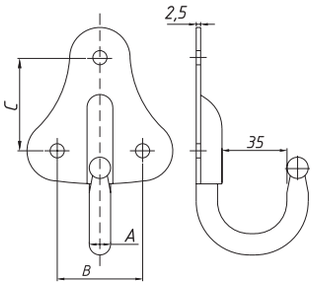

156700

Kanca Saclı

Hook With Sheet

Order Number **Sipariş No**	A / Type **A / Tip**	B (mm)	C - (mm)
156710	8 mm	37	35
156720	8 mm **Galvanizli** / Galvanized	37	35
156730	10 mm	40	50
156740	10 mm **Galvanizli** / Galvanized	40	50
156750	12 mm	52	60
156760	12 mm **Galvanizli** / Galvanized	52	60

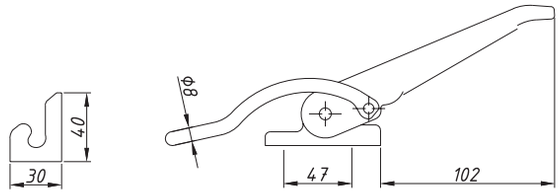

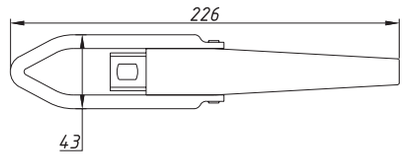

157000

Açık Kasa Kilidi

Open Pickup Lock

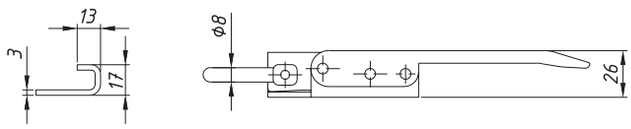

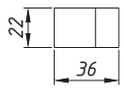

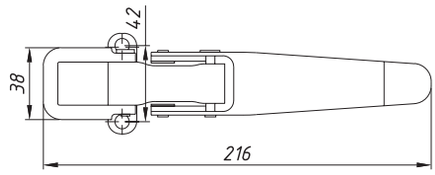

157100

Yeni Açık Kasa Kilidi

New Model Open Pickup Lock

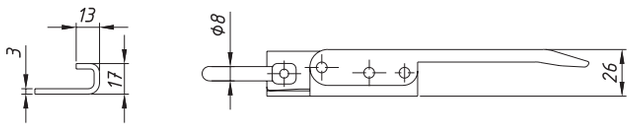

157250

İthal Açık Kasa Kilidi

Special Open Pickup Lock

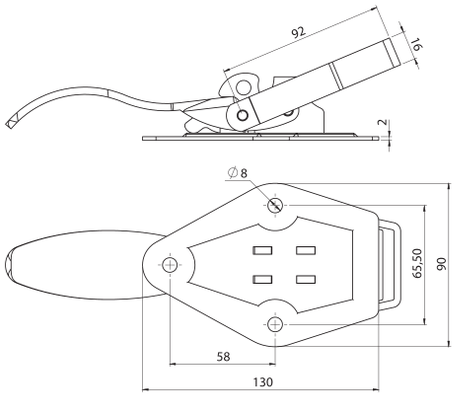

157255

Üçgen Kapak Kilidi 220mm

Triangle Cover Lock 220 mm

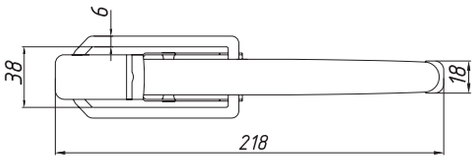

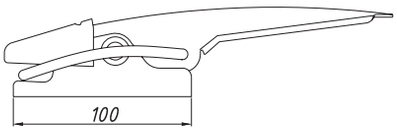

157300

Transit Kilidi

Transit Lock

157400

Büyük Kaput Kilidi

Big Hood Lock

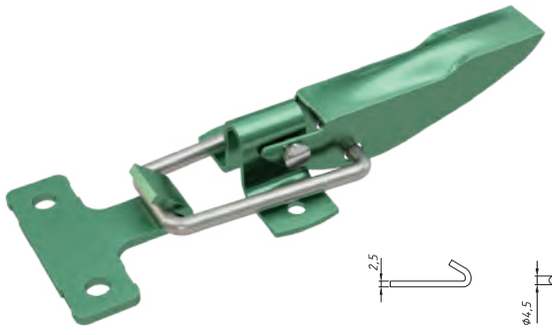

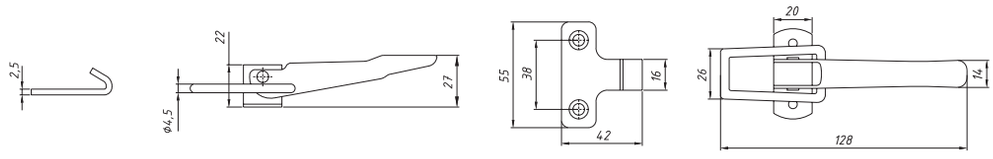

157500

Küçük Kaput Kilidi

Small Hood Lock

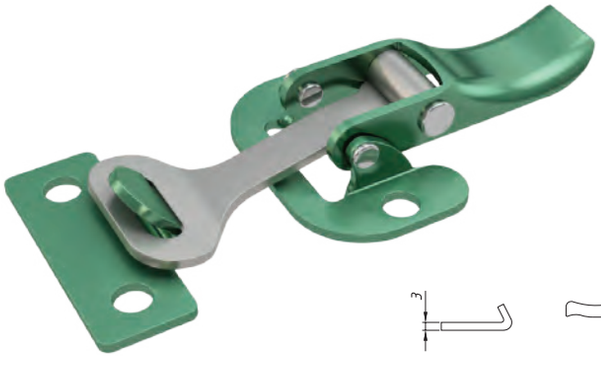

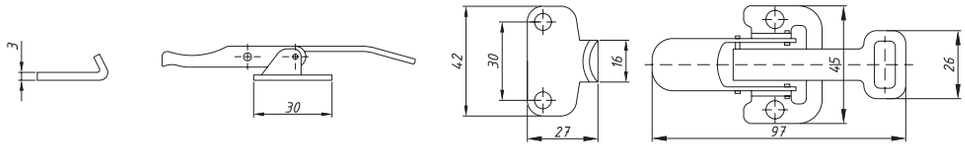

157650

Yeni Kaput Kilidi

New Hood Lock

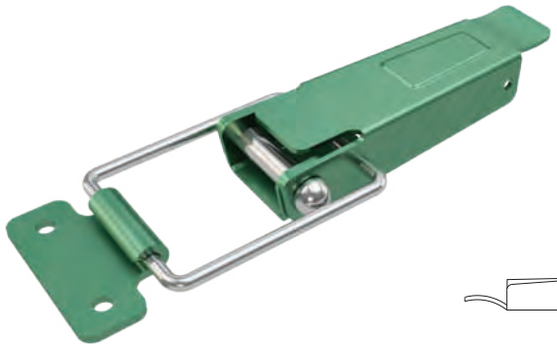

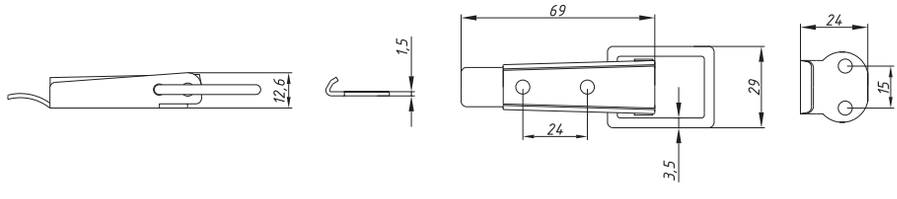

157660

Yivli Küçük Kaput Kilidi

Small Hood Lock With Thread

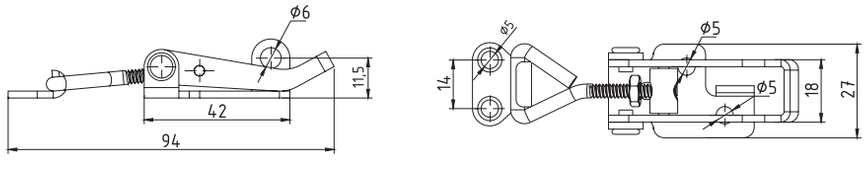

157670

Yivli Küçük Kilit

Small Lock With Thread

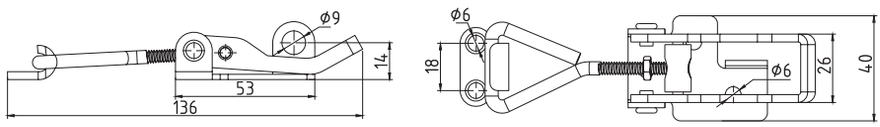

157600

Yivli Kaput Kilidi

Hood Lock With Thread

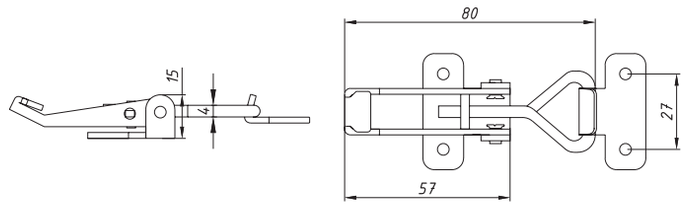

157601

Yivli Kaput Kilidi Oynar Başlı

Hood Lock With Thread Adjustable Head

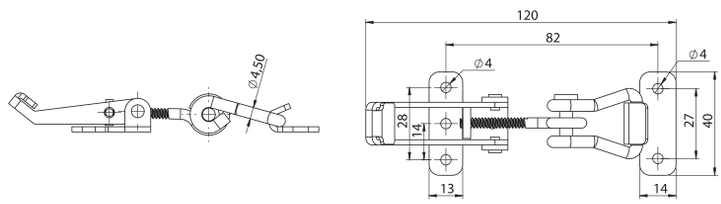

157680

Yivli Büyük Kilit

Big Lock With Thread

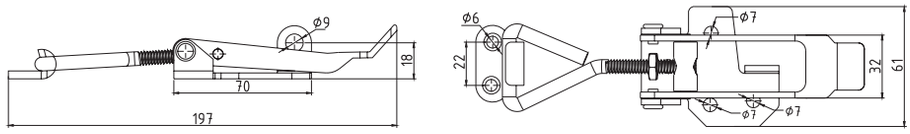

157690

Yivli Plastikli Kilit

Plastic Lock With Thread

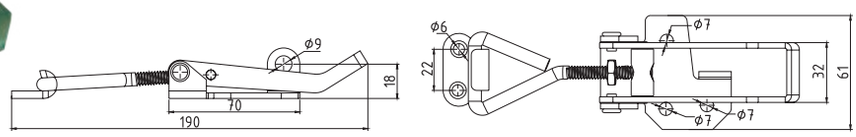

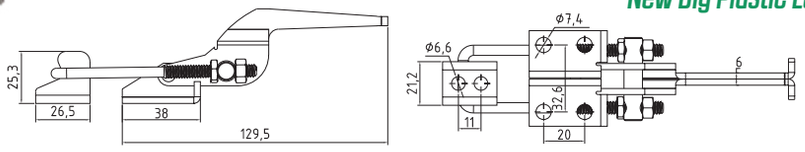

157695

Yivli Büyük Plastik Kilit Yeni

New Big Plastic Lock With Thread

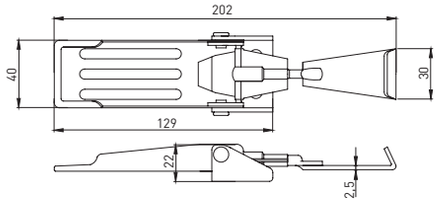

158000

Değirmen Kilidi

Mill Lock

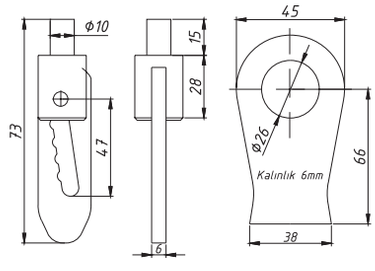

157700

Pikap Kilidi

Pickup Lock

Order Number **Sipariş No**	Type **Tip**
157700	**Takım** / Set
157710	Tırtırlı / Notched
157720	**Lama** / Sheet

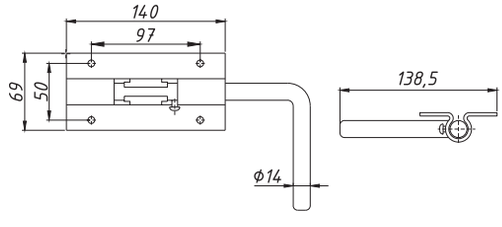

157800

Kollu Sürgü Kilidi

Slider Lock With Handle

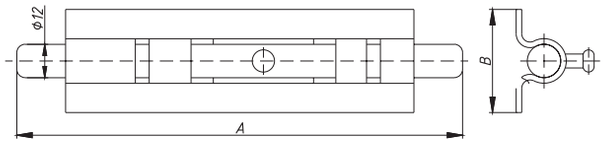

157900

Sürgü Kilidi

Slider Lock

Order Number **Sipariş No**	Type **Tip**	A (mm)	B (mm)
157910	**Küçük** / Small	40	100
157930	**Büyük** / Big	35	160

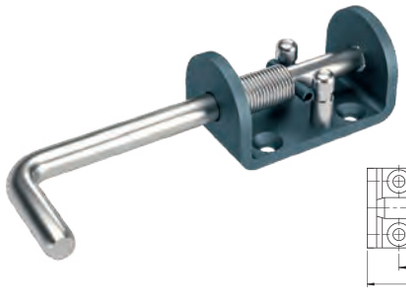

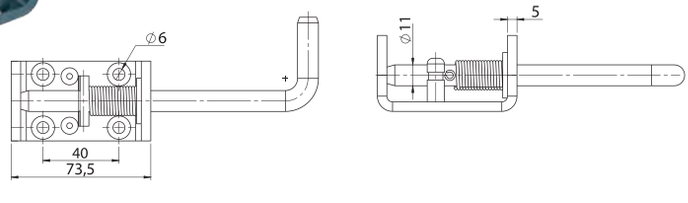

157935

Yaylı Yük Mandalı - Perçinli

Riveted Latch With Spring

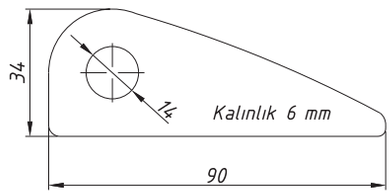

159800
Uzun Büyük Menteşe
Long Big Hinge

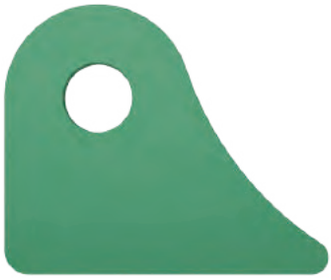

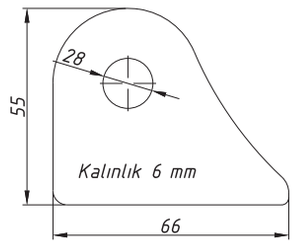

159900
Yeni Büyük Menteşe
New Big Hinge

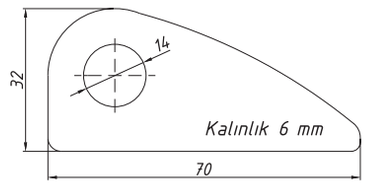

160000
Uzun Küçük Menteşe
Long Small Hinge

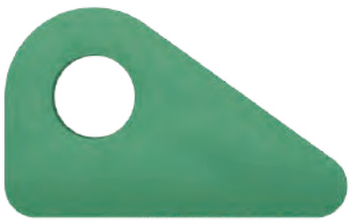

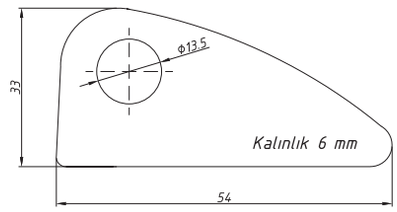

160100
Uzun Orta Menteşe
Long Middle Hinge

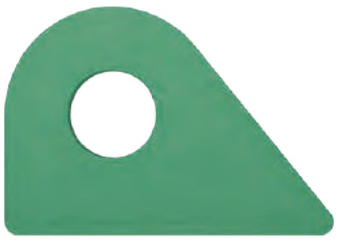

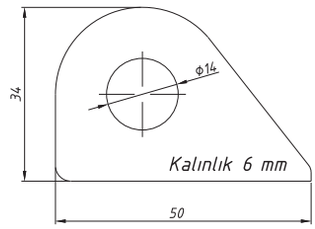

160200
Küçük Menteşe
Small Hinge

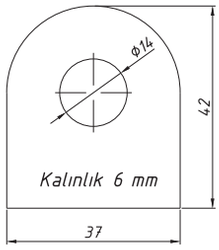

160300
D Menteşe
D Hinge

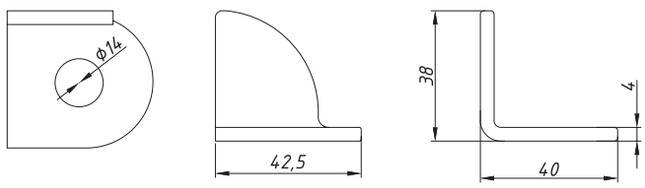

160400
L Menteşe (Sağ - Sol)
L Hinge (Right - Left)

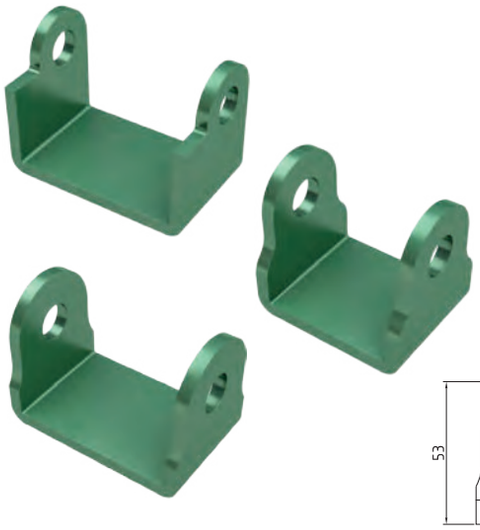

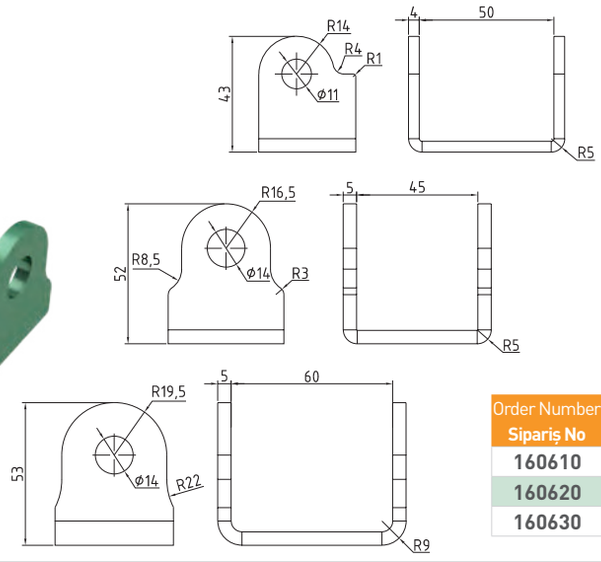

160600

Kulaklı Menteşe
Winged Hinge

Order Number Sipariş No	Type Tip	Width (mm) Genişlik (mm)	Height (mm) Yükseklik (cm)
160610	**Küçük** / Small	50	43
160620	**Orta** / Middle	45	52
160630	**Büyük** / Big	60	53

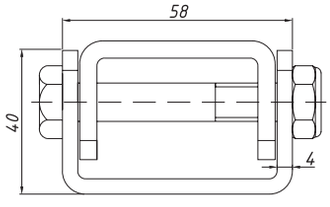

160700

Otosan Menteşe
Otosan Hinge

Order Number Sipariş No	Type Tip
160710	**Standart** / Standard
160720	**Galvanizli** / Galvanized

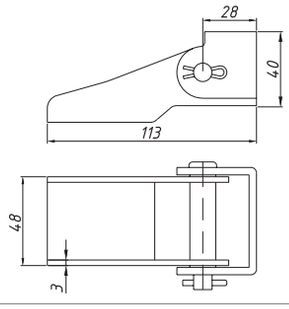

160800

Çelik Kasa Menteşe
Steel Body Hinge

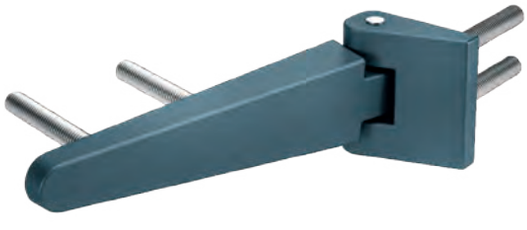

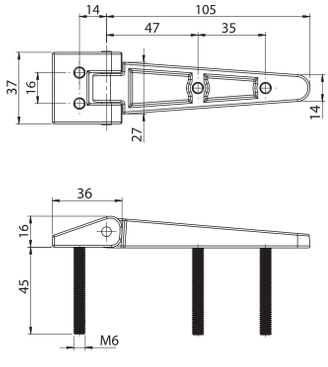

170050

Civatalı/Civatasız Menteşe
Hinge With Bolt/Without Bolt

Order Number Sipariş No	Type Tip
170050	**Menteşe Civatasız 135mm** Hinge Without Bolt
170060	**Menteşe Civatalı 135mm** Hinge With Bolt

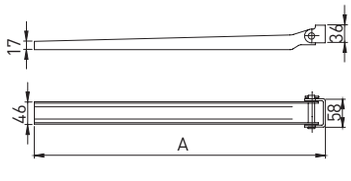

160910

Yan Kol
Side Arm

Order Number Sipariş No	A (cm)
160910	40
160920	50
160930	55
160940	60

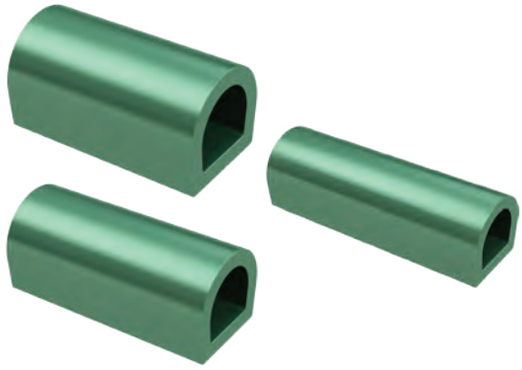

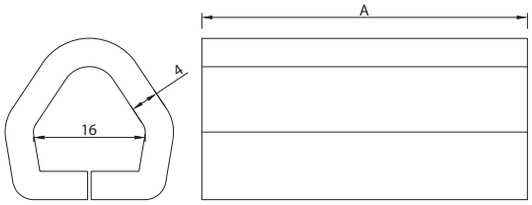

170000

Menteşe Borusu
Tube for Hinge

Order Number Sipariş No	A (mm)
170010	45
170020	55
170030	75

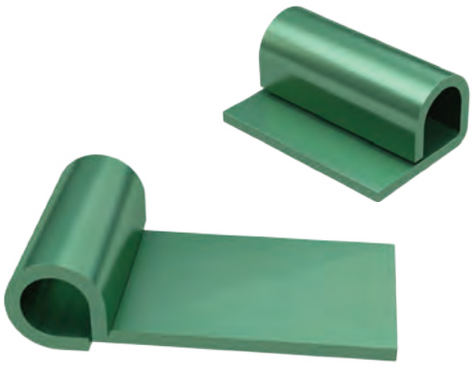

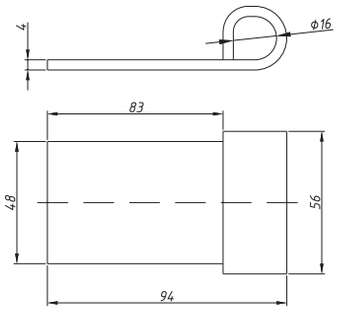

170100

Bacaklı Boru
Legged Tube

Order Number Sipariş No	Type Tip
170100	**Düz** / Standard
170115	**Kısa** / Short

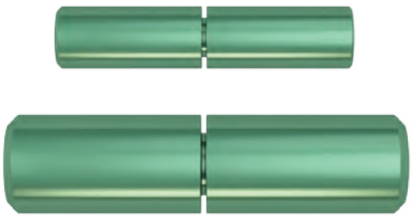

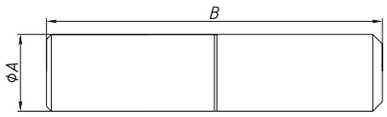

170200

Mil Menteşe
Shaft Hinge

Order Number Sipariş No	A (mm)	B (mm)
170210	10	55
170220	12	55
170230	14	60
170240	16	70
170250	18	75
170260	20	80
170270	22	90
170280	24	93

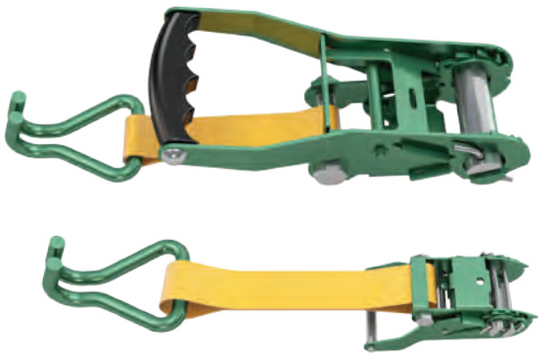

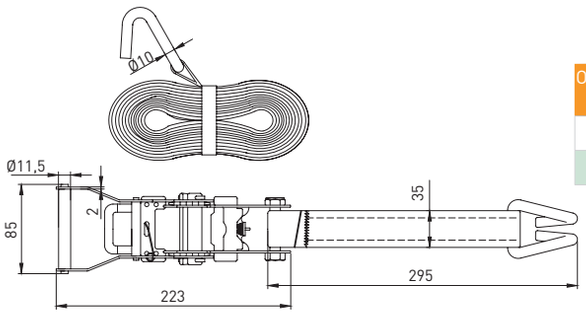

170300

Spanzet
Ratched Strap

Order Number Sipariş No	Type Tip
170310	10 mt
170320	6 mt

171000

Zincir
Chain

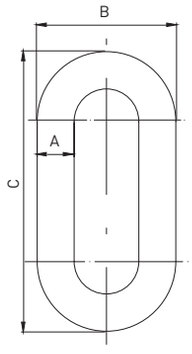

Order Number Sipariş No	A (mm)	B (mm)	C (mm)
171010	3	13	24
171020	4	16	30
171030	5	19	33
171040	6	23	38
171050	7	27	42
171060	8	29	46
171070	9	35	53
171080	10	38	58
171090	12	42	66

171100

Çektirme
Turnbuckles

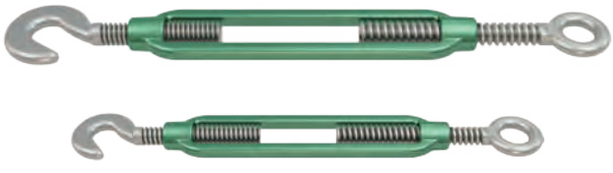

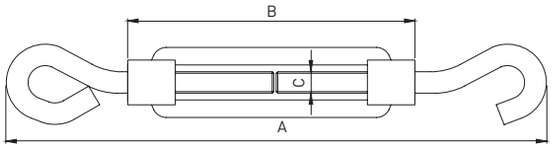

Order Number Sipariş No	Thread - C Yiv Çapı - C	A (mm)	B (mm)	Dia. Q (mm) Cap Q (mm)	Shaft Length (mm) Mil Boyu (mm)
171105	5/16 ''	160	110	25	85
171110	1/2 ''	270	190	16	100
171120	5/8 ''	330	230	20	130
171130	3/4 ''	400	280	22	150

171200

Zincir Kilidi
Chain Lock

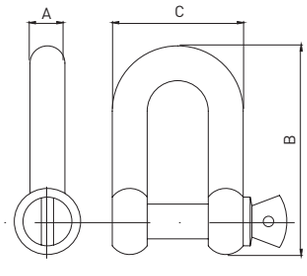

Order Number Sipariş No	Diameter Çap	A (mm)	B (mm)	C (mm)
171210	1/4"	6	40	24
171220	5/16"	8	50	30
171230	3/8"	10	57	36
171240	1/2"	12	65	43
171250	5/8"	15	90	59
171260	3/4"	20	120	71

171300

Halat Klemensi
Wire Rope Clips

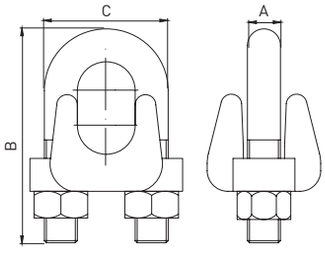

Order Number Sipariş No	Diameter Çap	A (mm)	B (mm)	C (mm)
171310	1/4"	5	40	20
171320	5/16"	7	45	25
171330	3/8"	9	52	30
171340	1/2"	11	62	38
171350	5/8"	13	80	48
171360	3/4"	20	120	60

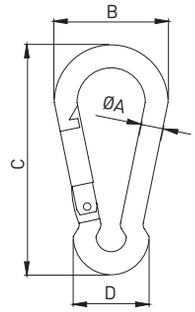

171400

Karabina
Carbine

Order Number Sipariş No	A (mm)	B (mm)	C (mm)	D (mm)
171410	4	20	40	14
171420	5	28	50	17
171430	6	30	60	20
171440	7	35	70	23
171450	8	45	80	26
171460	9	45	90	29
171470	10	50	100	32

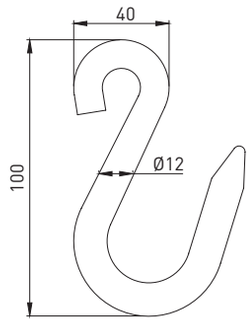

171500

S Kanca 12 (mm)
S Hook 12 (mm)

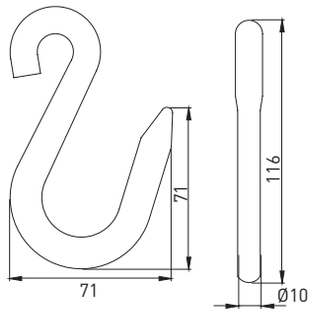

171600

S Kanca 10 (mm)
S Hook 10 (mm)

Büyük / Big

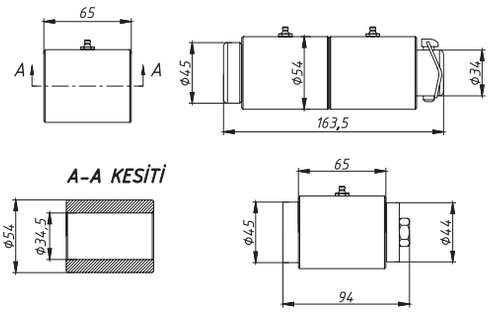

171700

Yana Açılır Takım
Side Opening System

Order Number Sipariş No	Type Tip
171700	**Büyük** / Big
171701	**Küçük** / Small

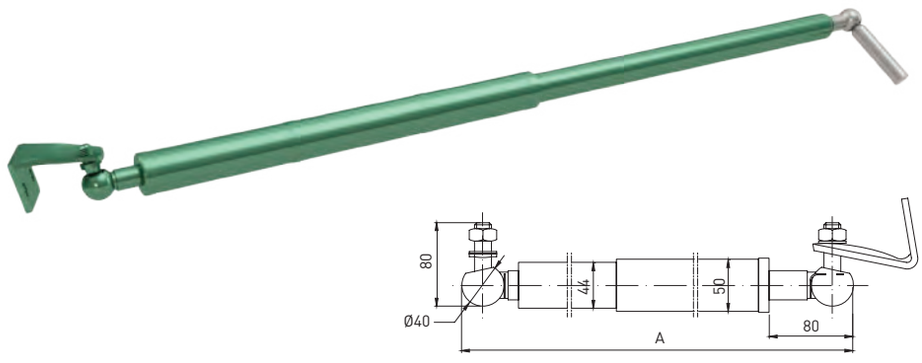

172200

Amortisör / Takım

Shock Absorber / Set

Order Number **Sipariş No**	**A (mm)**	**Newton**
172210	40	360
172220	50	650
172230	60	650
172305	Tampon	1.500

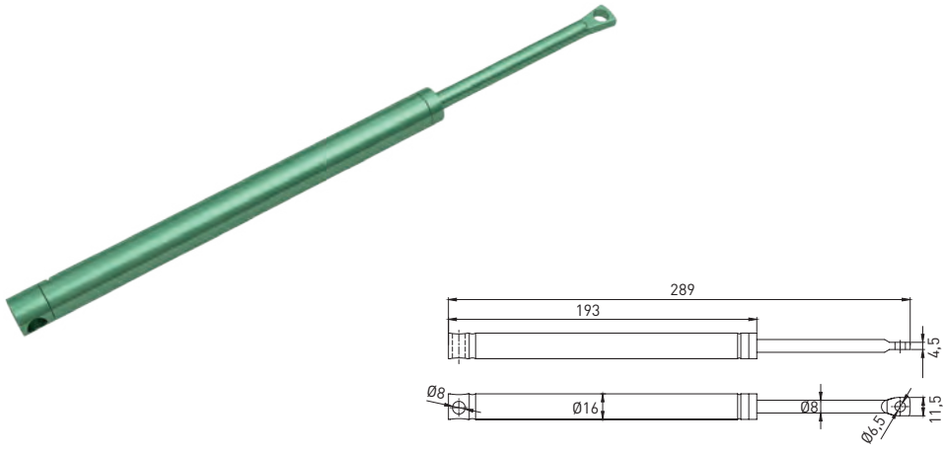

172300

Küçük Sarı Amortisör

Small Yellow Shock Absorber

Order Number **Sipariş No**	Lenght **Uzunluk**
172300	28 cm
172301	22 cm

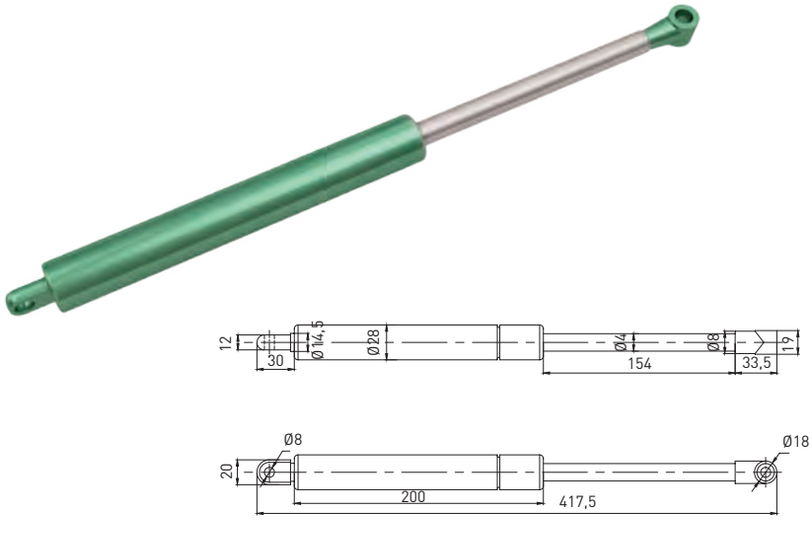

173500

Kabin Amortisörü

Cabin Shock Absorber

Order Number **Sipariş No**	Type **Tip**	Length (cm) **Boy (cm)**	**Newton**
173510	**Ön Cam** / Front Glass	18	220
173520	**Arka Cam** / Rear Glass	40	220
173530	**Kapı** / Door	28	220

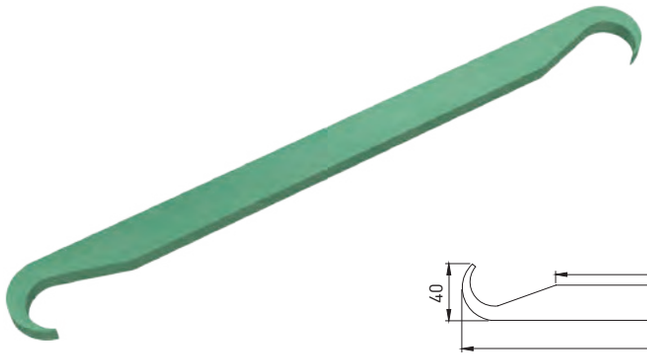

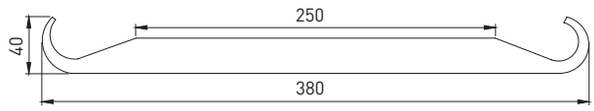

172100

Küçük Lama Zincir Kolu

Sheet Chain Handle / Small

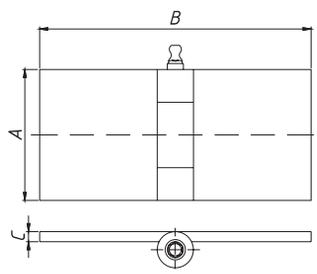

172400

Yaprak Menteşe

Leaf Hinge

Order Number Sipariş No	A (mm)	B (mm)	C (mm)
172410	40	90	4
172420	50	90	4
172430	60	115	5
172440	80	110	5

Zamak

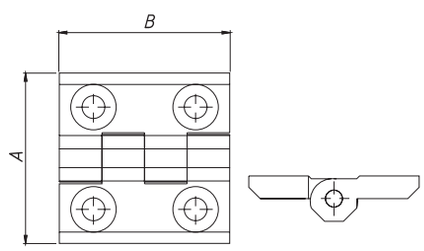

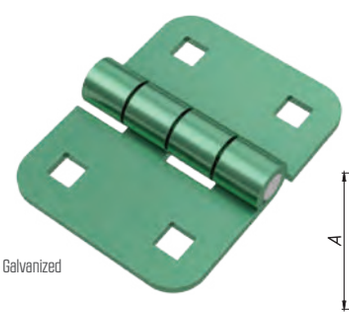

Galvanizli / Galvanized

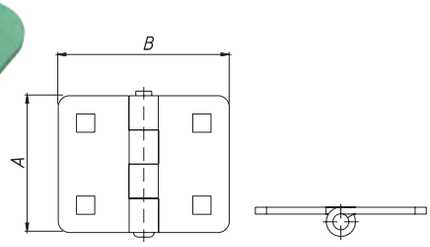

172500

Yaprak Menteşe - Özel

Leaf Hinge - Special

Order Number Sipariş No	A (mm)	B (mm)	Type Tip
172505	40	40	**Zamak - Parlak** / Shiny
172506	40	40	**Plastik** / Plastic
172511	50	50	**Plastik** / Plastic
172510	50	50	**Zamak - Parlak** / Shiny
172520	60	60	**Zamak - Parlak** / Shiny
172540	60	60	**Galvanizli** / Galvanized
172551	50	90	**Siyah** / Black

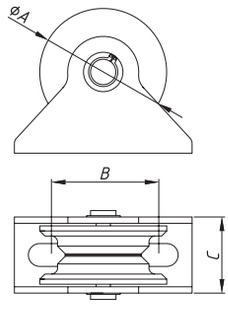

172600

Saçlı Makara - Pimli

Rail Pulley Wheel - With Pin

Order Number Sipariş No	A (mm)	B (mm)	C (mm)
172605	40	35	23
172610	50	42	23
172620	60	45	30
172630	70	58	30
172640	80	65	30
172650	90	73	30
172660	100	78	30

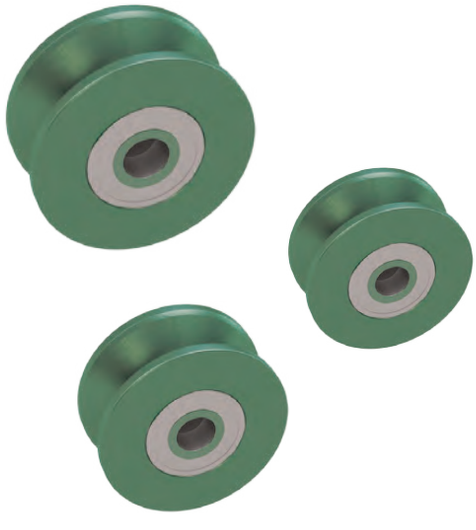

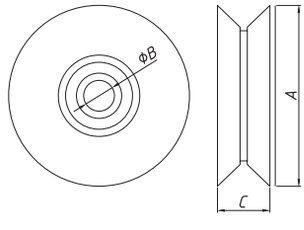

172700

Makara - Pimli

Rail Pulley - With Pin

Order Number Sipariş No	A (mm)	B (mm)	C (mm)
172705	40	12	23
172710	50	12	23
172720	60	12	30
172730	70	15	30
172740	80	15	30
172750	90	15	30
172760	100	15	30

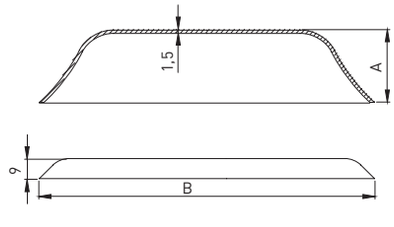

172900

Etek Sacı

Flank Sheet

Order Number Sipariş No	A (mm)	B (mm)
172910	65	300
172920	75	300
172930	85	315
172940	105	335

173000

Kabin Kilidi
Cabin Lock

Order Number **Sipariş No**	Type **Tip**
173010	**Sağ** / Right
173020	**Sol** / Left
173030	**Karşılık**

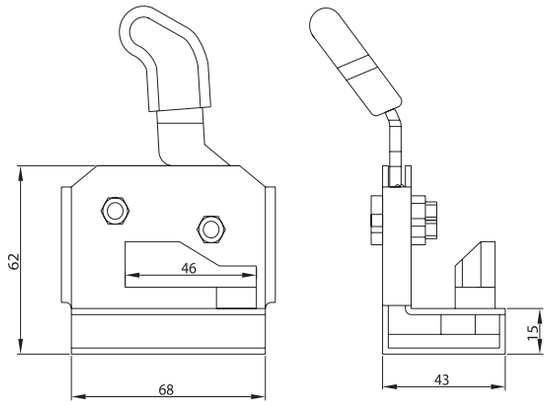

173400

Kabin Kilit Kolu
Cabin Lock Handle

Order Number **Sipariş No**	Type **Tip**
173410	**Anahtarlı** / With Key
173420	**Düz** / Standard

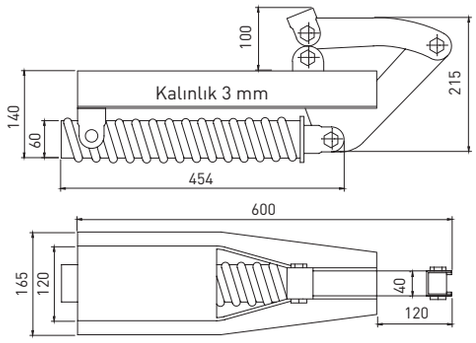

247100

Kapak Yayı Arka

Rear Lid Spring

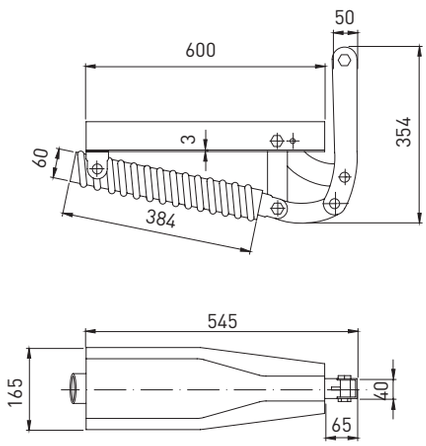

247200

Kapak Yayı Yan

Side Lid Spring

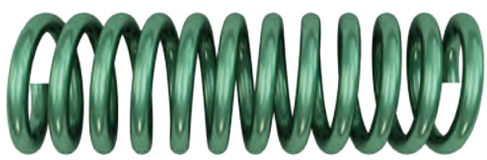

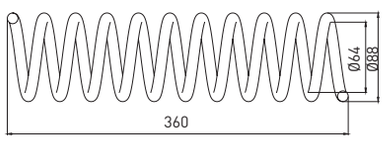

247400

Kapak Yayının Yayı

Spring for Lid Spring

248000

Bağlantı Somunlu
U Bolt

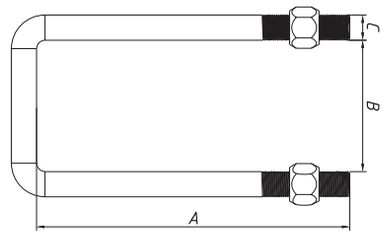

5/8" İnce Bağlantı (Kalın Diş) / 5/8" Thin Thread

Order Number **Sipariş No**	A - (mm)	B - (mm)	Thread - C **Yiv Ölçüsü - C**
248010	250	70	M16
248020	250	90	M16
248030	280	70	M16
248040	280	90	M16
248050	300	70	M16
248060	300	90	M16
248070	320	70	M16
248080	320	90	M16
248090	350	70	M16
248100	350	90	M16
248110	380	70	M16
248120	380	90	M16
248130	410	70	M16
248140	410	90	M16
248150	430	70	M16
248160	430	90	M16
248170	450	70	M16
248180	450	90	M16
248190	480	70	M16
248200	480	90	M16
248210	510	70	M16
248220	510	90	M16
248230	530	70	M16
248240	530	90	M16
248250	550	70	M16
248260	550	90	M16

3/4" Kalın Bağlantı (Kalın Diş) / 3/4" Thick Thread

Order Number **Sipariş No**	A - (mm)	B - (mm)	Thread - C **Yiv Ölçüsü - C**
248510	250	70	3/4"
248520	250	90	3/4"
248530	280	70	3/4"
248540	280	90	3/4"
248550	300	70	3/4"
248560	300	90	3/4"
248570	320	70	3/4"
248580	320	90	3/4"
248590	350	70	3/4"
248600	350	90	3/4"
248610	380	70	3/4"
248620	380	90	3/4"
248630	410	70	3/4"
248640	410	90	3/4"
248650	430	70	3/4"
248660	430	90	3/4"
248670	450	70	3/4"
248680	450	90	3/4"
248690	480	70	3/4"
248700	480	90	3/4"
248710	510	70	3/4"
248720	510	90	3/4"
248730	530	70	3/4"
248740	530	90	3/4"
248750	550	70	3/4"
248760	550	90	3/4"
248800	**Bağlantı Laması - Ara 70mm** Connector Sheet for 70mm		
248801	**Bağlantı Laması - Ara 90mm** Connector Sheet for 90mm		

ÇAYIROVA

Römork ve Treyler Ekipmanları

TREYLER EKİPMANLARI

TRUCK TRAILER COMPONENTS

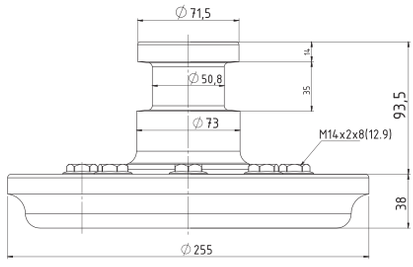

201000

2" King Pimi

2" King Pin

Order Number **Sipariş No**	Capacity **Kapasite**	Type **Tip**	Certificate No **Belge No**
201020	152 kN	**E - Belgeli** / E - Certificated	E11 55R-0110706
201030		**Standart** / Standard	
201040	175 kN	**E - Belgeli** / E - Certificated	E11 55R-0110706
201050		**Flanş** / Flange	

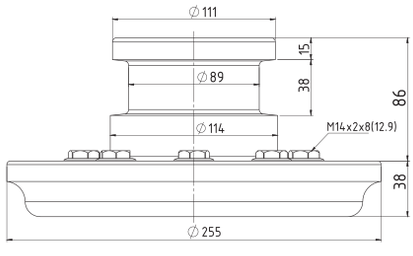

201100

3,5" King Pimi

3,5" King Pin

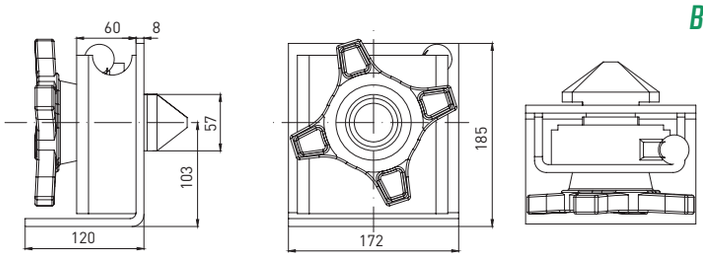

202100

Konteyner Kilidi - 52 mm

Big Container Twist Lock- 52 mm

Order Number **Sipariş No**	Type **Tip**
202100	**Kilit** / Lock
202500	**Döküm Yuva** Casting Bedding

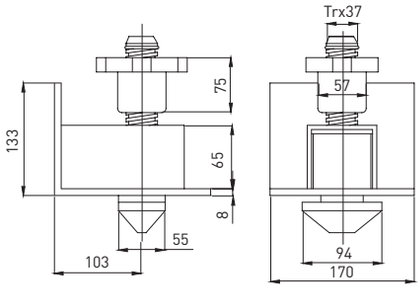

202200

Konteyner Kilidi - 38 mm

Small Container Twist Lock - 38 mm

203000

Treyler Krikosu
Landing Leg

Order Number Sipariş No	Type Tip
203100	**Oynar Taban** / Moving Base
203110	**Şanzımanlı Taraf** / Gear Side
203220	**Düz Taban** / Fixed Base

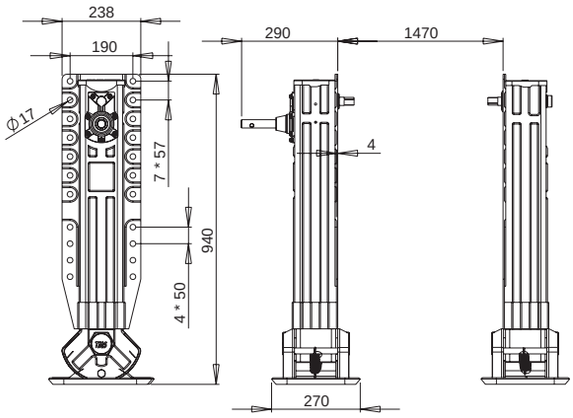

205000

Hava Tüpü / *Air Tube*

Order Number Sipariş No	Capacity Kapasite	A - cm	B - cm
205010	CE 20 Lt	45	25
205015	CE 30 Lt	65	25
205020	CE 40 Lt	73	28
205030	CE 60 Lt	57	38
205040	CE 80 Lt	75	38
205050	35 Lt	75	25
205075	60 Lt	82	32
205002	20 Lt	**Bağlantı - Adet Ø25 /** Connector Pcs Ø25	
205003	40 Lt	**Bağlantı - Adet Ø28 /** Connector Pcs Ø28	
205004	60 Lt	**Bağlantı - Adet Ø32 /** Connector Pcs Ø32	
205005	60 Lt	**Bağlantı - Adet Ø38 /** Connector Pcs Ø38	

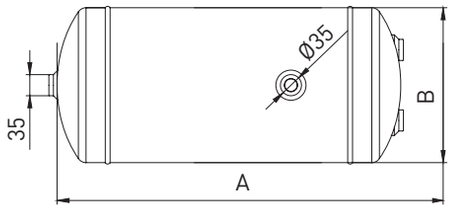

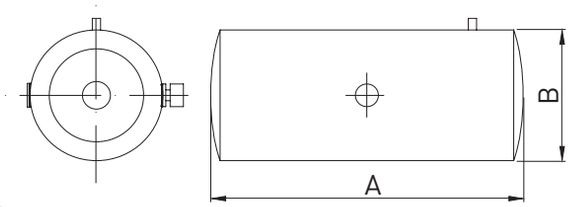

206000

Yağ Tankı
Oil Tube

Order Number Sipariş No	Capacity Kapasite	A - cm	B - cm
206010	120 Lt	110	38
206020	150 Lt	140	38
206040	180 Lt	125	45

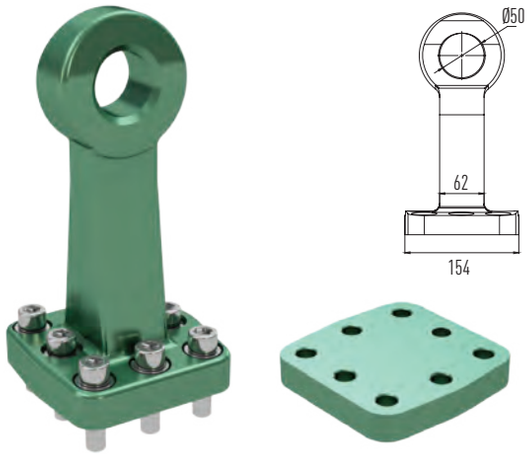

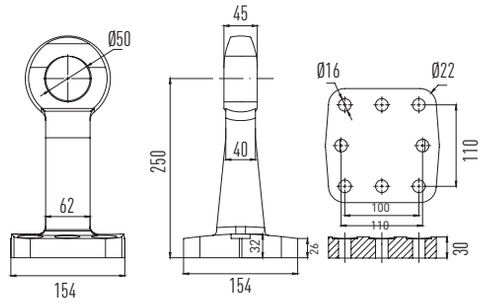

207000

Çeki Oku

Drawbar Eye

Order Number Sipariş No	Capacity Kapasite	Type Tip	Certificate No Belge No
207010	190 kN	50 mm	E11 55R 01/06*11273*00
207020	125 kN	40 mm	E11 55R-0110068
207030	**Flanş** / Flange		

Çayırova

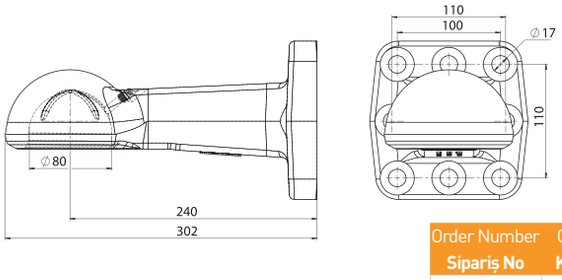

207011

Çeki Oku Küresel

Towing Eye Ball Coupling

Order Number Sipariş No	Capacity Kapasite	Certificate No Belge No
207011	120 kN	E6 55R 01/08*1632*00

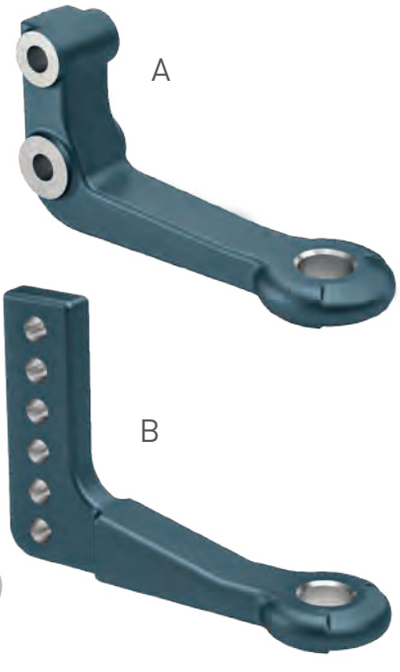

207012

Çeki Oku Açılı - E Belgeli

Angular Towing Eye - e Certificated

Order Number Sipariş No	Capacity (Kg) Kapasite (Kg)	Static Load (kg) Statik Yük (kg)	Type Tip	Certificate No Belge No
207012	65 kN	500	40 mm (A)	e4 94/20-1593*00
207014	4.000	800	40 mm (B)	M2987

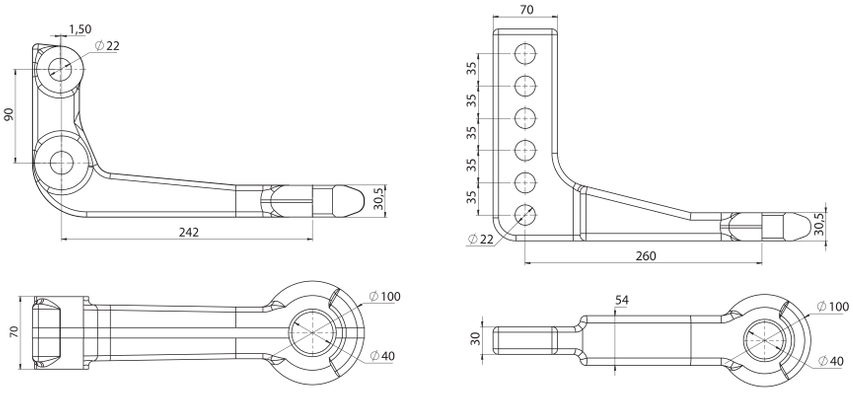

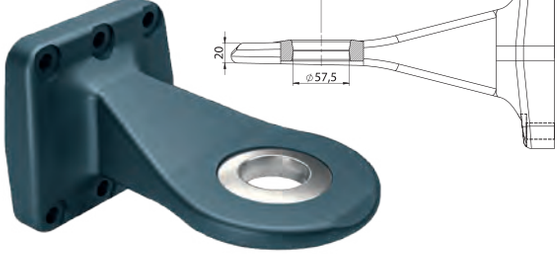

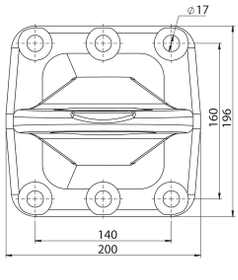

207016

Çeki Oku Yassı 57mm - 30 Ton - E belgeli

Flanged Flat Drawbar Eye - e Certificated

Order Number Sipariş No	Capacity Kapasite	Certificate No Belge No
207016	300 kN	E11 55R-011 0084

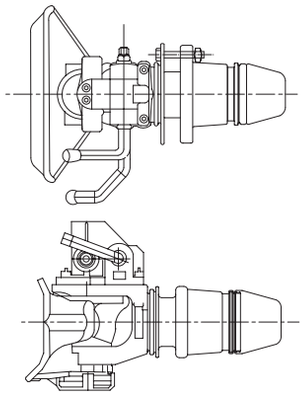

208100

Çeki Oku Gözü
Drawbar Coupling

Order Number **Sipariş No**	Capacity **Kapasite**	Type **Tip**	Certificate No **Belge No**
208100	200 kN	50 mm	E11 55R-011046
208150	110 kN	40 mm	E11 55R-014228

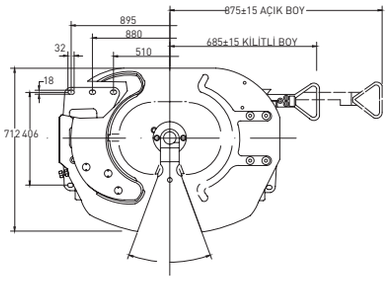

209000

Beşinci Teker
Fifth Wheel

Order Number **Sipariş No**	Type **Tip**	Certificate No **Belge No**
152 kN	50 mm	E11 55R-0110381

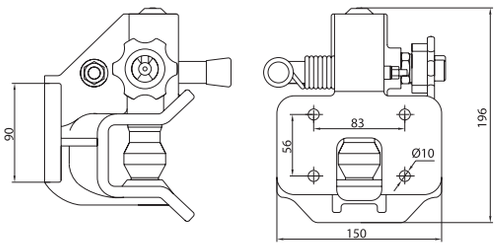

210100

Çeki Kaplini
Drawbar Coupling

Capacity **Kapasite**	Type **Tip**	Certificate No **Belge No**
30 kN	40 mm	E11 55R-013282

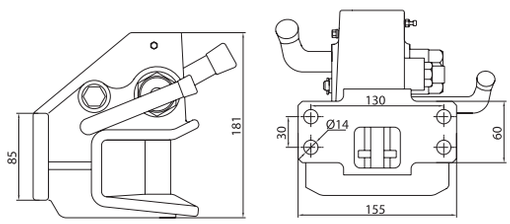

210200

Çeki Kaplini - Küçük
Small Drawbar Coupling

Capacity **Kapasite**	Type **Tip**	Certificate No **Belge No**
30 kN	40 mm	E11 55R-01*3007

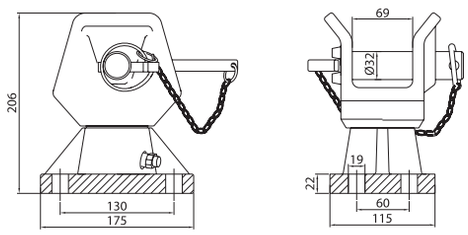

210300

Çeki Kaplini - Tarım
Agricultural Drawbar Coupling

Capacity **Kapasite**	Certificate No **Belge No**
60 kN	e3*2015/208*2016/1788 /ND*30087

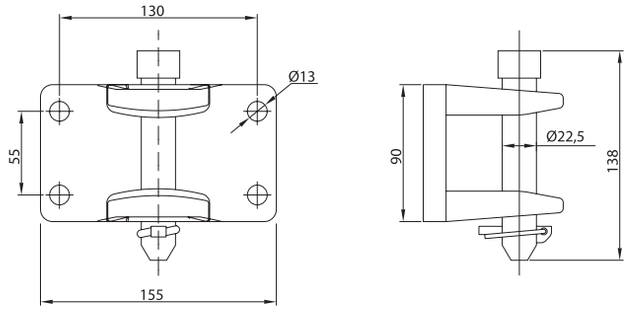

210400

Kamyon Çeki - Pimli

Truck Coupling With Pin

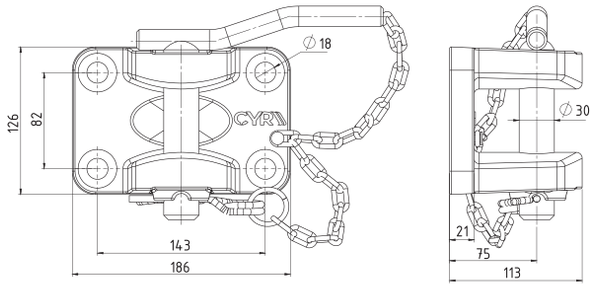

210500

Kamyon Çeki - Pimli - Kollu

Truck Coupling With Pin & Arm

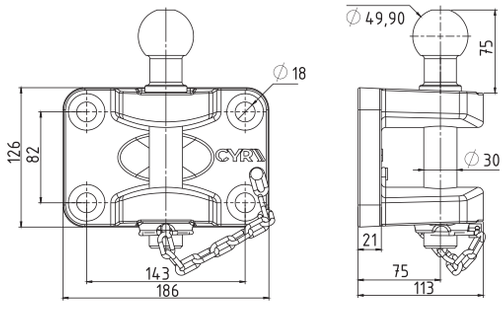

210600

Topuzlu Çeki Dört Delikli - e Belgeli

Coupling With Ball & Four Holes

Order Number **Sipariş No**	Capacity **Kapasite**	Certificate No **Belge No**
210610	23 kN	E11 55R01/06 11278*00
210620		**Belgesiz** Without Certificated

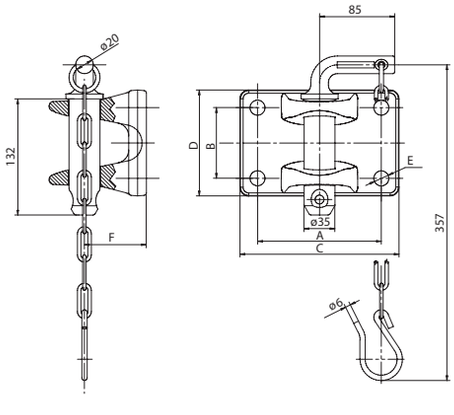

210600

Çeki Demiri Dört Delikli Pimli Kollu

Coupling With Pin and Arm

Order Number **Sipariş No**	Capacity **Kapasite**	Dimensions / **Ölçüler (mm)** **A**	**B**	**C**	**D**	**E**	**F**
210613	25 Ton (GM103)	120	55	155	90	Ø15	70
210614	35 Ton (GM104)	140	80	180	120	Ø17	70
210615	50 Ton (GM105)	160	100	200	140	Ø21	70

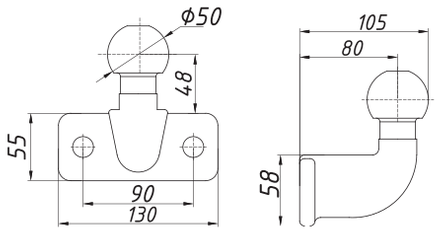

306100

Eğik Topuz e-Belgeli

e - Certificated Flanged Towball

Order Number **Sipariş No**	Capacity **Kapasite**	Certificate No **Belge No**
306100	18,5 kN	E11*55R01/06 11369*00
306200	-	**Standart** / Standard

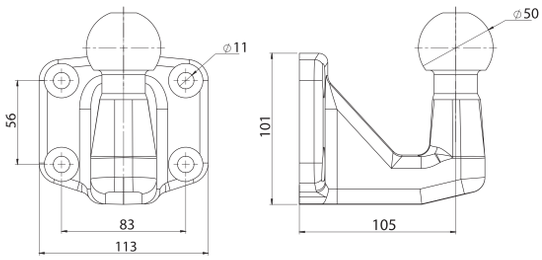

210606

Dört Delikli Eğik Çeki Topuzu - Büyük

Big - Angular Coupling With Four Holes

Order Number **Sipariş No**	Capacity (Kg) **Kapasite (Kg)**
210606	3.500

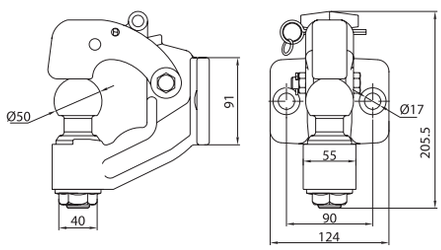

210700

Jeep Çekisi-Topuzlu / e-Belgeli

Certificated Jeep Coupling With Ball

	Order Number **Sipariş No**	Capacity **Kapasite**	Certificate No **Belge No**
2 Delikli / 2 Holes	**210700**	28 kN	E3*55R01*3015
4 Delikli / 4 Holes	**210705**	28 kN	E3*55R01*3042

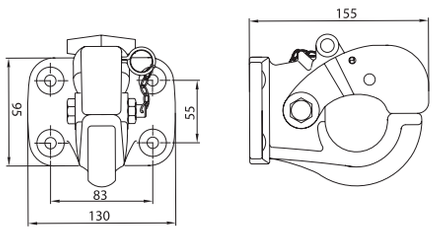

210800

Jeep Çekisi

Jeep Coupling

Capacity **Kapasite**	Certificate No **Belge No**
31 kN	E2*55R011*2203

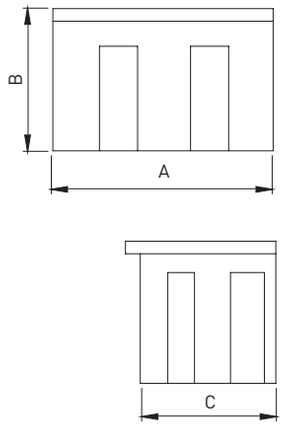

211000

Takım Dolabı (Plastik)

Tool Box (Polyethylene)

Order Number **Sipariş No**	**A x B x C - cm**
211016	48x38x38
211020	60x42x44
211032	80x47x43

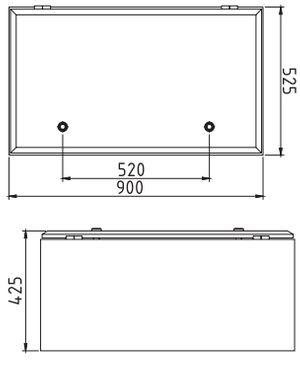

211250

Takım Dolabı (Sac)

Tool Box (Sheet)

Order Number **Sipariş No**	Diemensions - cm **Ölçüler - cm**
211255	50x45x54
211257	100x45x54
211259	150x45x54

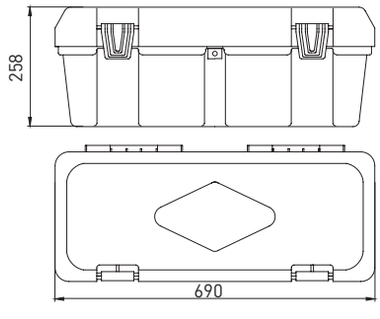

211500

Yangın Tüpü Dolabı (Plastik)

Fire Box (Polyethylene)

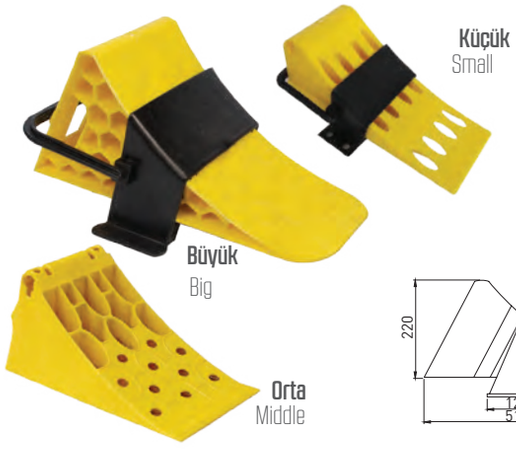

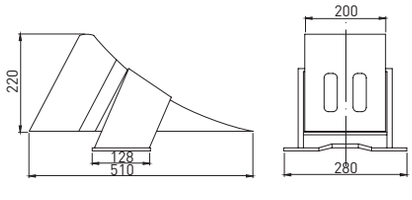

211750

Tekerlek Takozu (Plastik)

Wheel Chock (Polyethylene)

Order Number **Sipariş No**	Type **Tip**
211750	**Büyük - Askılıklı** Big Size Chock With Mounting Part
211751	**Orta** / Middle Size Chock
211752	**Küçük - Askılıklı** Small Size Chock With Mounting Part

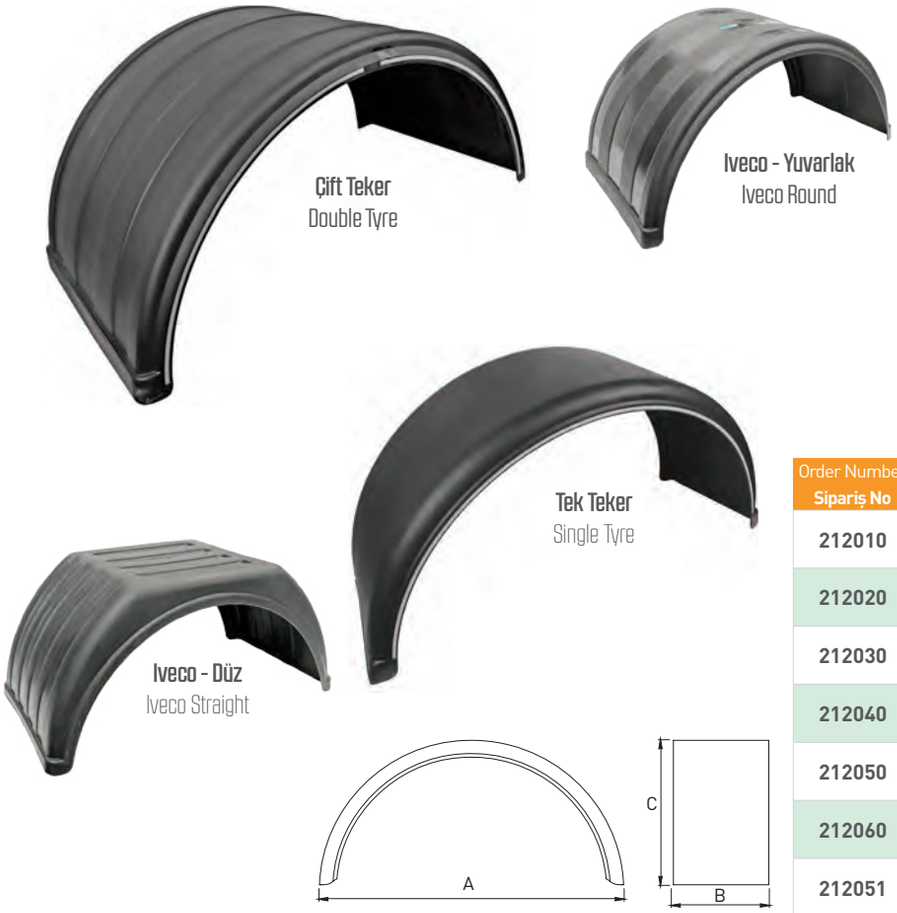

212000

Çamurluk (Plastik)
Mudguard (Polyethylene)

Order Number **Sipariş No**	Type **Tip**	A (cm)	B (cm)	C (cm)	Environment **Çevre (cm)**
212010	**Çift Teker** Double Tyre	130	65	65	208
212020	**Çift Teker Yarım** Double Tyre, Semi	65	65	65	104
212030	**Tek Teker** Single Tyre	124	42	58	188
212040	**Tek Teker Yarım** Single Tyre, Semi	62	42	58	94
212050	**Isuzu - Iveco** **Düz** / Straight	62	42	58	94
212060	**Isuzu -Iveco** **Yuvarlak** / Round	62	42	58	94
212051	**Üstü Düz** Top Side Straight	95	30	47	153

213000

Çamurluk Kelepçesi
Mudguard Clamp

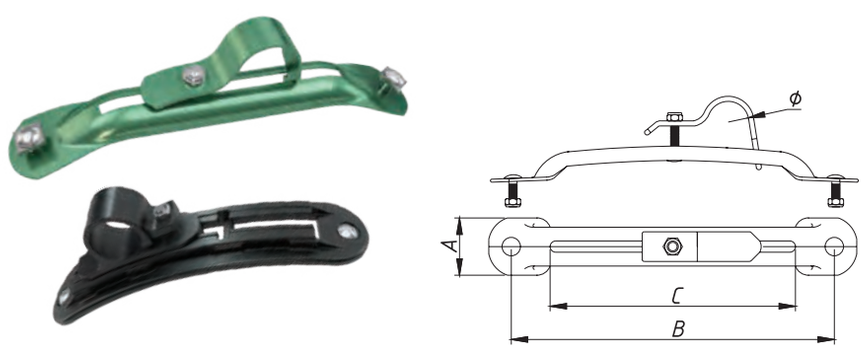

Order Number **Sipariş No**	Type **Tip**	A (cm)	B (cm)	C (cm)
213010	**Sac 42 mm** Sheet 42 mm	50	255	180
213020	**Sac 52 mm** Sheet 52 mm	50	255	180
213030	**Plastik 42 mm** Plastic 42 mm	68	245	220

214000

Çamurluk Borusu
Mudguard Bracket

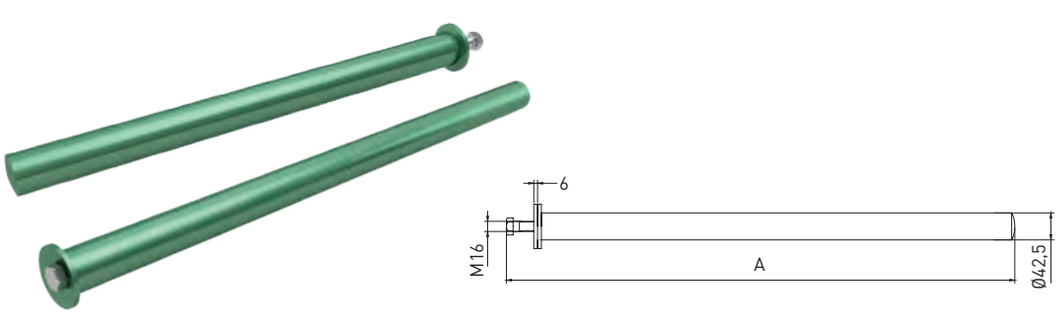

Order Number **Sipariş No**	A (cm)
214010	55
214020	75

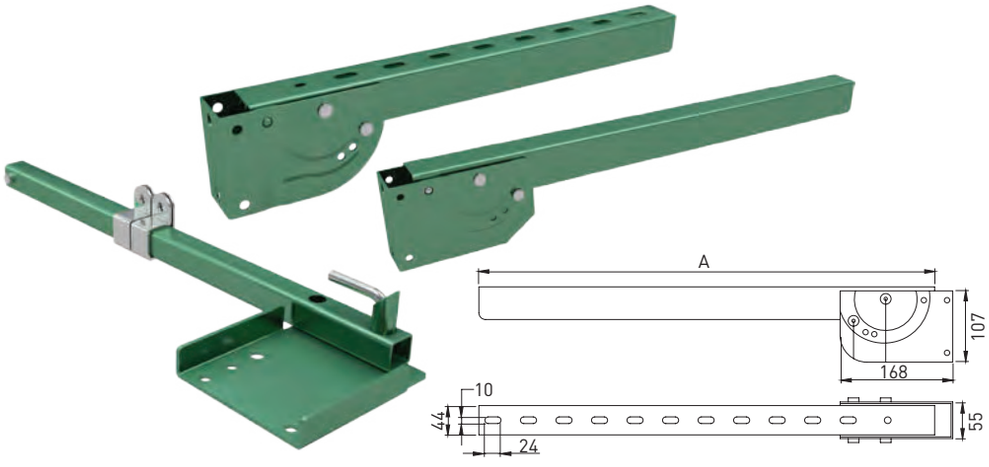

217000

Bisikletlik (Kısa - Uzun)

Bicycle Shed (Short - Long)

Order Number **Sipariş No**	**B (cm)**
217010	54 cm
217020	68 cm
217030	**Yeni** / New

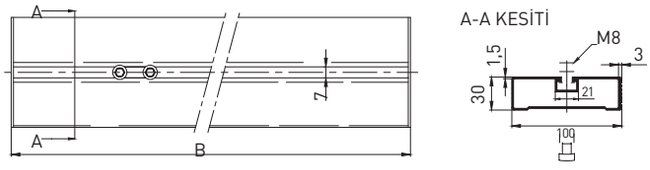

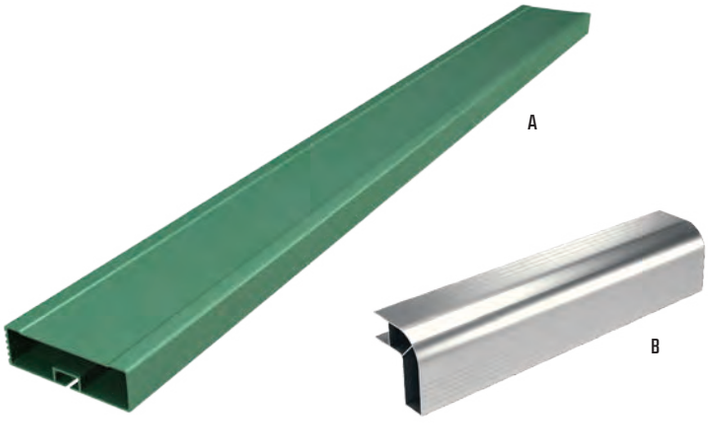

218000

Alüminyum Profil

Aluminum Profile

Order Number **Sipariş No**	**B (cm)**	Model **Model**
218010	100	**Düz** / Standard (A)
218020	130	**Düz** / Standard (A)
218030	150	**Düz** / Standard (A)
218040	170	**Düz** / Standard (A)
218050	200	**Düz** / Standard (A)
218055	250	**Düz** / Standard (A)
218056	300	**Düz** / Standard (A)
218057	400	**Düz** / Standard (A)
218060	600	**Düz** / Standard (A)
218003	300	**Köşeli Geniş 100x90** / Angular Wide (B)
218004	600	**Köşeli Geniş 100x90** / Angular Wide (B)
218005	45	**Köşeli Geniş 100x90** / Angular Wide (B)
218006	15 - **Plastik**/Plastic	**Köşeli** / Angular (B)
218007	45 - **Plastik**/Plastic	**Köşeli** / Angular (B)
218008	45	**Köşeli Dar 70x70** / Angular Narrow
218009	300	**Köşeli Dar 70x70** / Angular Narrow

Plastik Tapalı ve Civatalı / ***With Plastic Plug and Screw Bolt***

218095

Tenteli Dorse Tipi Kargo Tutucu

Cargo Keeper

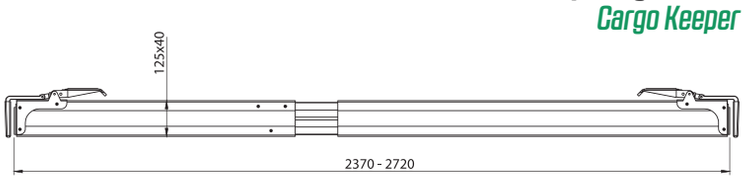

221330

Alüminyum Teleskopik Rampa - E Belgeli

Aluminium Telescople Ramp - e Certificated

Order Number **Sipariş No**	Length **Boy**
221330	122 cm
221331	151 cm
221332	212 cm

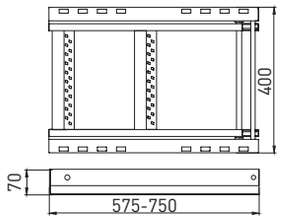

220000

Merdiven
Ladder

Order Number **Sipariş No**	Type **Tip**
220010	**2 Basamaklı** / 2 Stage
220020	**3 Basamaklı** / 3 Stage
220025	**6 Basamaklı-Alüminyum** / 6 Stage
220030	**2 Basamaklı - İnce** / 2 Stage - Thin

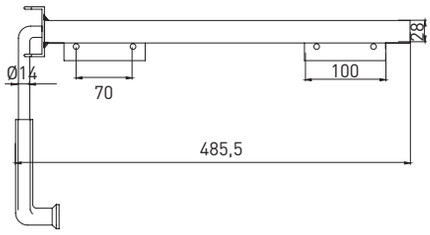

219000

Arka Kapı Tutamağı
Rear Door Retainer

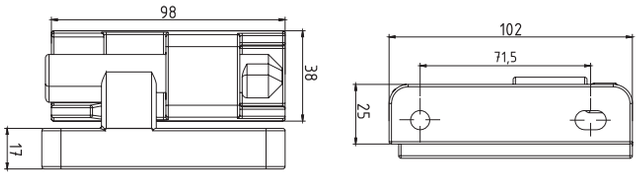

221100

Döküm Dorse Menteşe
Casting Hinge

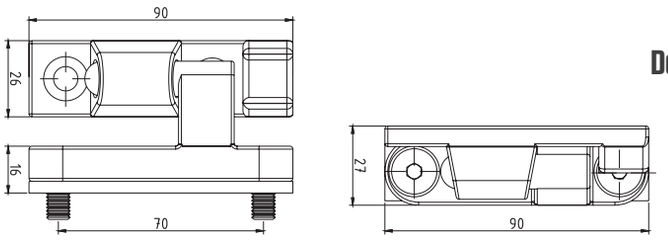

221200

Dövme Menteşe - Küçük
Small Wrought Hinge

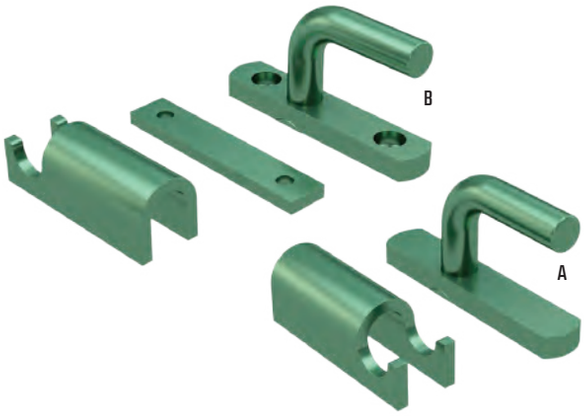

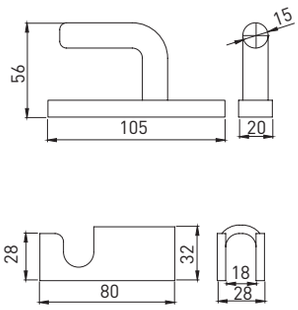

221300

Yuvarlak Dorse Menteşe
Round Hinge

Order Number **Sipariş No**	Type **Tip**
221310	**Sac Kapak (A)** Sheet Cover (A)
221320	**Alüminyum Kapak (B)** Aluminum Cover (B)

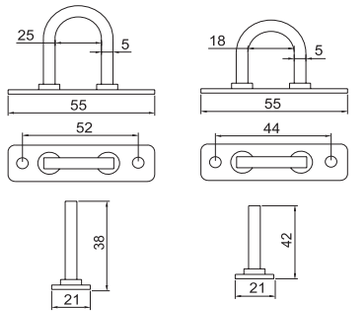

223100

Çadır Kancası İki Delikli Yuvarlak

Staple

Order Number **Sipariş No**	Type **Tip**
223110	**Küçük** / Small
223120	**Büyük** / Big

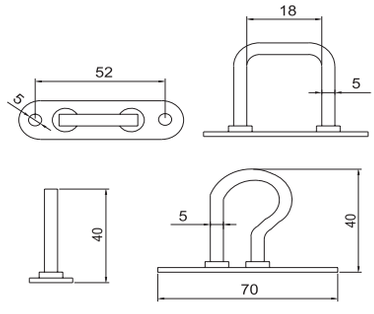

223200

Çadır Kancası İki Delikli Köşeli

Staple / Cornered

Order Number **Sipariş No**	Type **Tip**
223210	**Köşeli - Küçük** / Angled-Small
223215	**Köşeli - Büyük** / Angled-Big
223220	**Radüslü** / Splayed

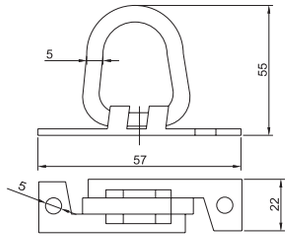

223300

Çadır Kancası Oynar

Staple / Moveable

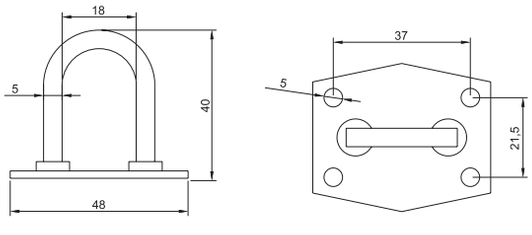

223400

Çadır Kancası Dört Delikli

Staple / 4 Holes

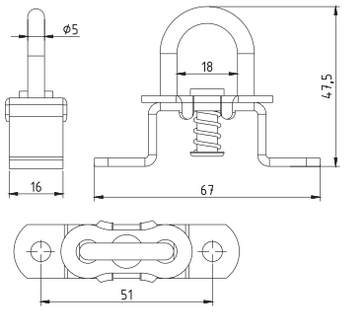

223500

Çadır Kancası

Yaylı

Order Number **Sipariş No**	Type **Tip**
223500	**Galvanizli** / Galvanized
223510	**Krom** / Chrome

Kamyon / Truck

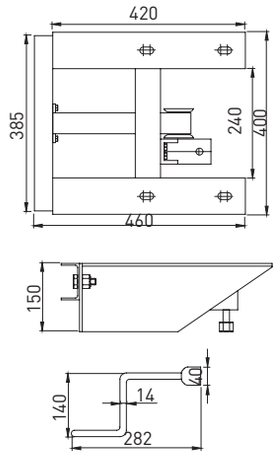

224000

Stepne Taşıyıcı

Spare Wheel Carrier

Order Number Sipariş No	Type Tip
224010	**Kamyon** / Truck
224011	**Küçük Kamyon 16 Jant** Small Truck 16 Wheel Rim
224020	**Dorse** / Trailer
224030	**Ateko** / Atego

224050

Stepne Taşıyıcı

Spare Wheel Holder

Order Number Sipariş No	Type Tip
224050	**Zincirli Stepne Taşıyıcı** Spare Wheel Holder With Chain
224055	**Halatlı Stepne Taşıyıcı** Spare Wheel Holder With Rope

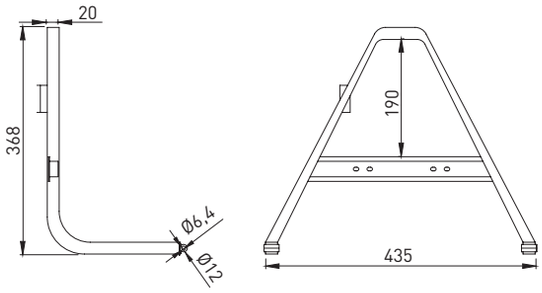

224100

Stepne Taşıyıcı Boru

Tube For Spare Wheel Carrier

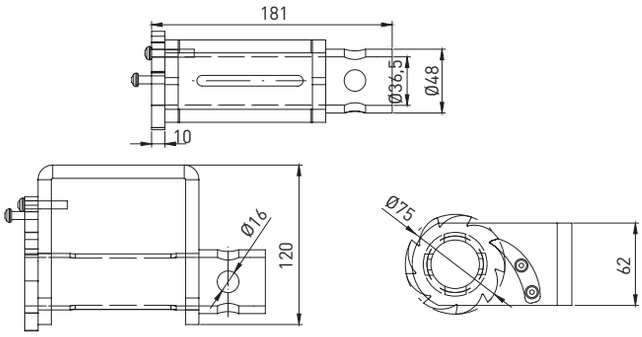

222000

Halat Sarma Mekanizması

Rope Winch

225500

Su Tankı Paslanmaz
Stainless Water Tank

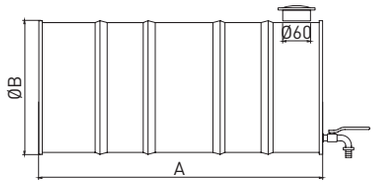

Order Number **Sipariş No**	Capacity (Lt.) **Kapasite (Lt.)**	**A (mm)**	**B (mm)**
225510	25	400	280
225520	30	510	280
225530	35	600	280
225540	70	600	380
225550	90	800	380
225570	200	600	900

147000

Su Tankı Galvanizli
Galvanized Water Tank

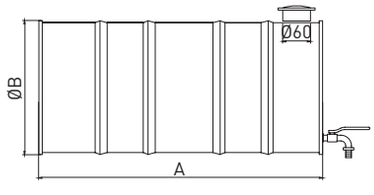

Order Number **Sipariş No**	Capacity (Lt.) **Kapasite (Lt.)**	**A (mm)**	**B (mm)**
147005	16	250	280
147010	25	400	280
147020	30	510	280
147030	35	600	280
147040	70	600	380
147050	90	800	380
147510	**Su Tankı Şeridi (Adet)** / Water Tank Strip		

148000

Su Tankı Plastik
Plastic Water Tank

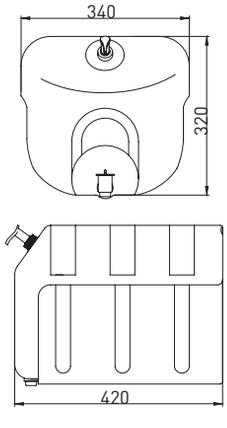

Order Number **Sipariş No**	Capacity (Lt.) **Kapasite (Lt.)**	**A (mm)**
148008	30	**İnce** / Thin
148010	30	**Kalın** / Thick
148020	50	**Kalın** / Thick

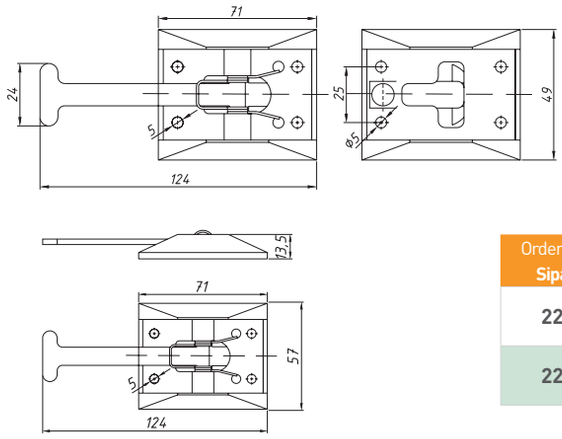

228000

Kapı İstinadı
Door Retainer

Order Number **Sipariş No**	Type **Tip**
228010	**Krom-Yeni Model** Chrome-New Model
228020	**Galvanizli-Yeni Model** Galvanized-New Model

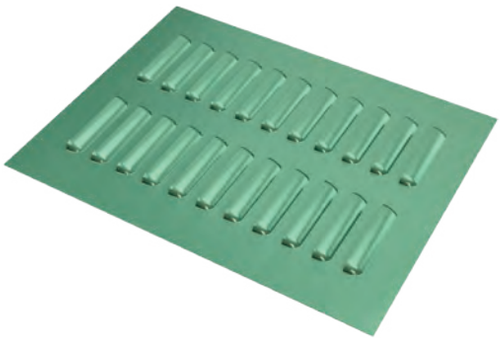

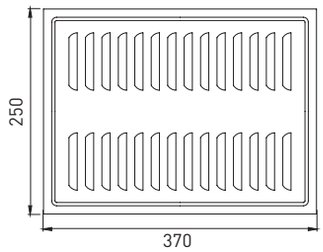

230000

Panjur
Shutter

Order Number **Sipariş No**	Type **Tip**
230010	**Krom** / Chrome
230020	**Galvanizli** / Galvanized

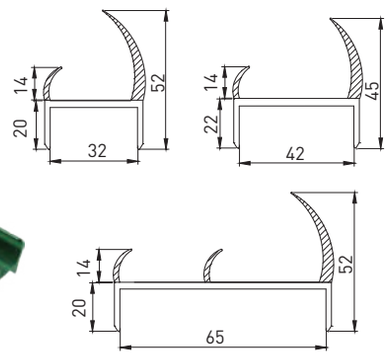

232000

PVC Fitil - 3.2 mt
PVC Seal - 3.2 mt

Order Number **Sipariş No**	Dimensions - mm **Ölçü - mm**
232010	32
232020	42
232030	47
232040	65
232050	85

Boylar : 3 mt - 3,2 mt - 3,5 mt - 5 mt
Lenght : 3 mt - 3,2 mt - 3,5 mt - 5 mt

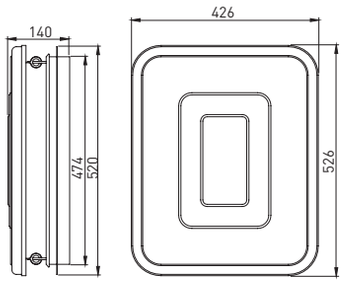

233000

Havalandırma
Ventilation

Order Number **Sipariş No**	Type **Tip**
233010	40/50

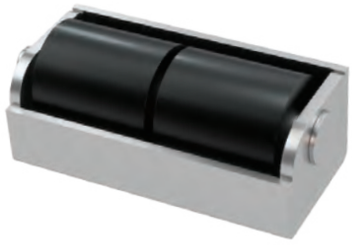

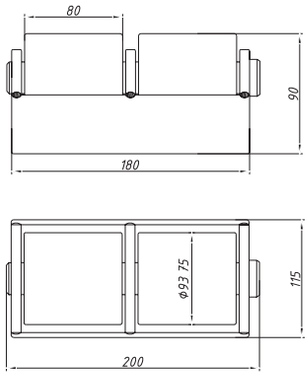

226000

Dönerli Takoz
Roller Buffer

Order Number **Sipariş No**	Type **Tip**
226005	**1'li Küçük** / Single Small
226006	**1'li Büyük** / Single Big
226010	**2'li** / Double
226020	**2'li Büyük** / Double Big

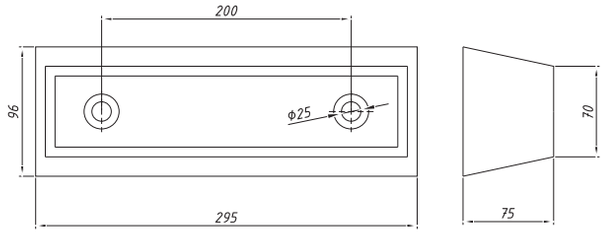

226100

Arka Takoz - Büyük
Big Rear Buffer

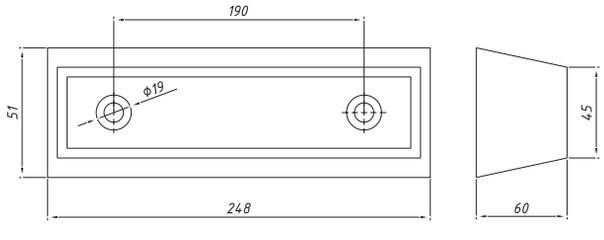

226200

Arka Takoz - Küçük
Small Rear Buffer

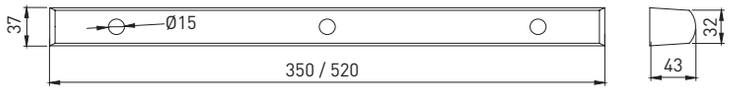

226300

Yan Takoz 52 cm
Side Buffer 52 cm

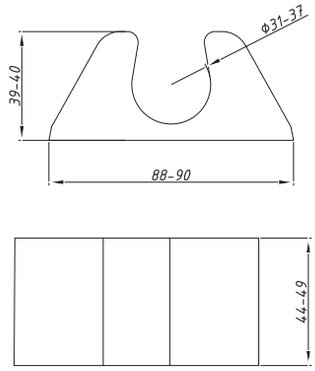

226400

Branda Takozu
Convas Buffer

Order Number **Sipariş No**	Type **Tip**
226410	**Küçük** / Small
226420	**Büyük** / Big

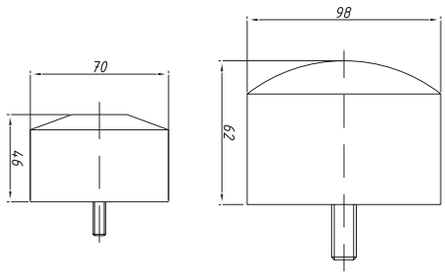

226500

Yuvarlak Takoz
Round Buffer

Order Number **Sipariş No**	Type **Tip**
226510	**Delikli** / With Hole
226520	**Deliksiz** / Without Hole
226530	**En Büyük** / Biggest
226540	**Civatasız** / Without Screw Bolt

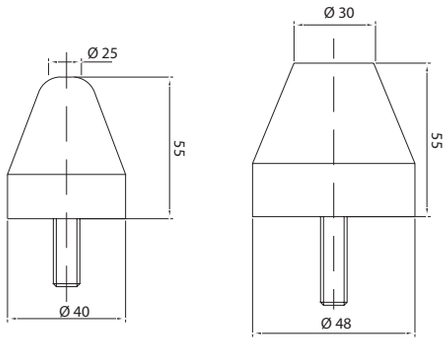

226600

Armut Takoz
Middle Buffer

Order Number **Sipariş No**	Type **Tip**
226610	**Küçük** / Small
226620	**Büyük** / Big

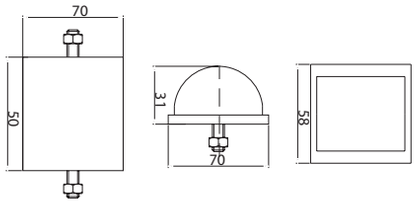

226700

Köşeli Takoz
Corner Buffer

Order Number **Sipariş No**	Type **Tip**
226710	**Köşeli** / Angled
226720	**Çift Civatalı** / With Double Bolt

249000

Dorse Lamba Seti

Trailer Lamp / Set

Order Number Sipariş No	Type Tip
249010	**Truva Trailight Set** / Brand Truva
249020	**Karya Trailight Set** / Brand Karya
249030	**Saba Parçalı** / Brand Saba
249040	**Üçler Parçalı** / Brand Üçler

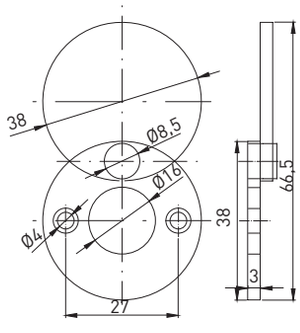

240200

Kapak Pulu

Keyhole Cover

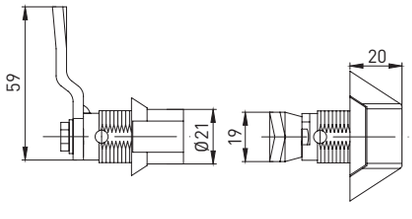

241000

Kelebek Kilit

Wing - Lock

Order Number Sipariş No	Type Tip
241010	**Düz** / Standard
241020	**Anahtarlı** / With Key

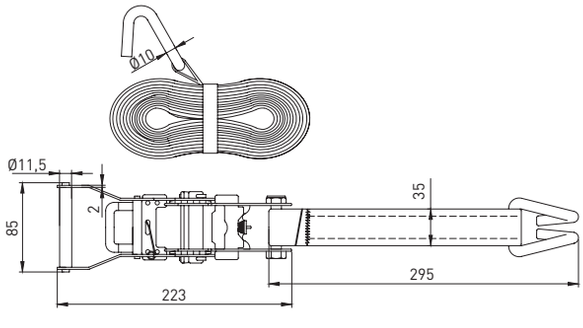

170300

Spanzet

Ratched Strap

Order Number Sipariş No	Type Tip
170310	10 mt
170320	6 mt

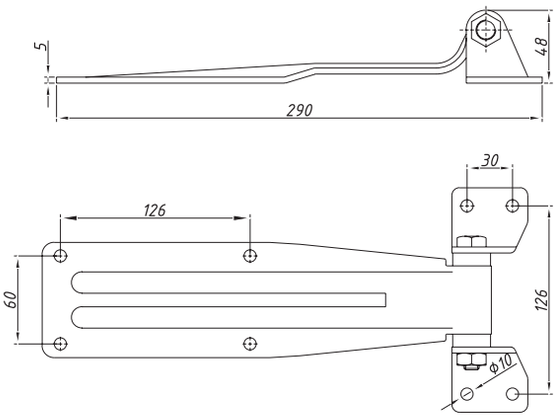

234000

Kapalı Kasa Menteşe - Küçük

Small Rear Door Hinge

Order Number **Sipariş No**	Type **Tip**
234010	**Normal** / Standard
234020	**Galvanizli** / Galvanized

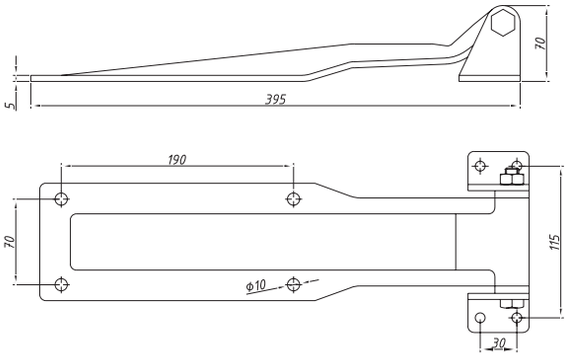

234100

Kapalı Kasa Menteşe - Büyük

Big Rear Door Hinge

Order Number **Sipariş No**	Type **Tip**
234100	**Normal** / Standard
234110	**Galvanizli** / Galvanized

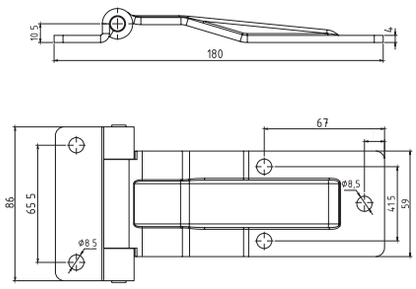

234200

Menteşe - Krom Minik

Chrome Micro Hinge

Order Number **Sipariş No**	Type **Tip**
234220	**Buzdolabı Menteşe - Krom** Refrigerator Hinge Chrome
234230	**Buzdolabı Menteşe Galvanizli** Refrigerator Hinge Galvanized

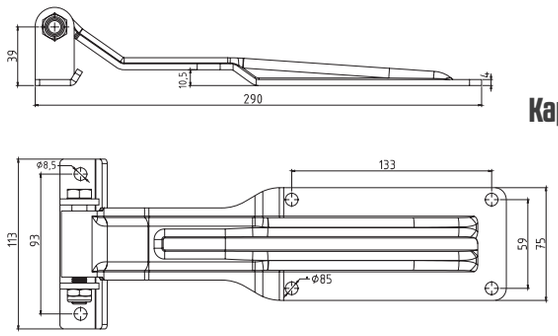

234300

Kapalı Kasa Menteşe Küçük - Krom

Small Chrome Rear Door Hinge

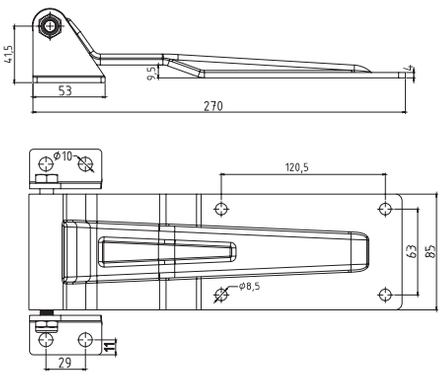

234400

Kapalı Kasa Menteşe Orta - Krom

Middle Chrome Rear Door Hinge

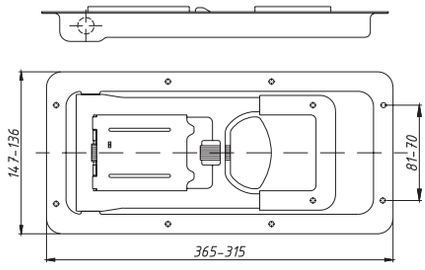

235000

Gömme Kilit Krom - Takım

Mortise Lock Chrome / Set

Order Number **Sipariş No**	Type **Tip**
235020	**Büyük** / Big

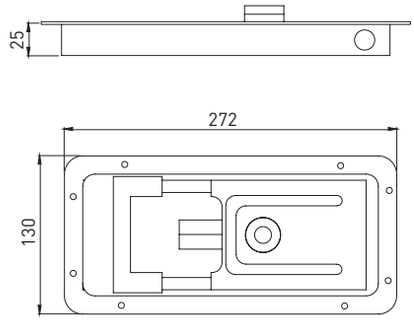

235100

Gömme Kilit Krom - Eski

Old Model Mortise Lock Chrome

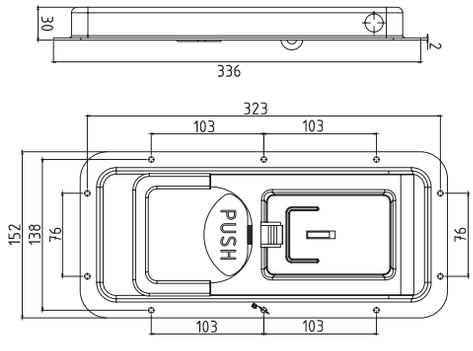

235350

Gömme Kilit Yeni Model - Büyük

New Model Big Mortise Lock

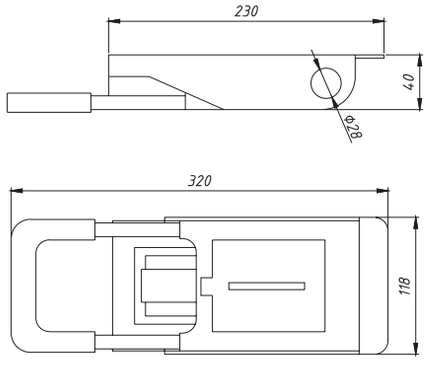

235400

Kapı Üstü Krom Kilit - Büyük

Chrome Big Trailer Lock

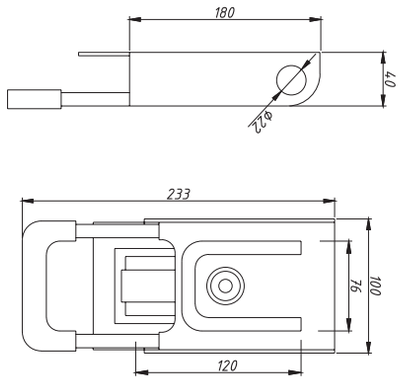

235500

Kapı Üstü Krom Kilit - Orta

Chrome Middle Trailer Lock

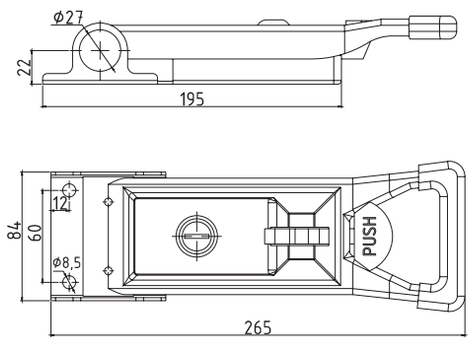

235600

Kapı Üstü Krom Kilit - Küçük

Chrome Small Trailer Lock

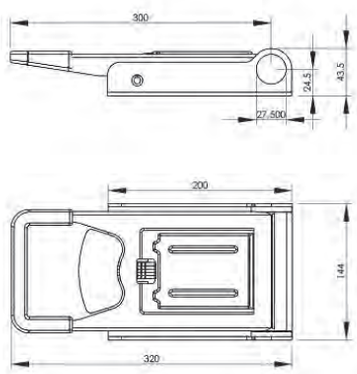

235700

Dıştan Kilit Büyük Krom

Chrome Big Outher Lock

236100

Kapı Kolu Krom Lama - Set

Trailer Lock With Chrome Handle - Set

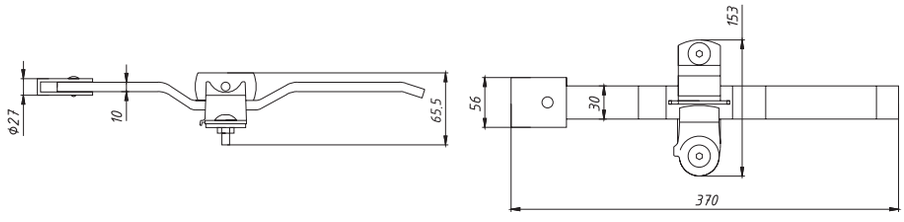

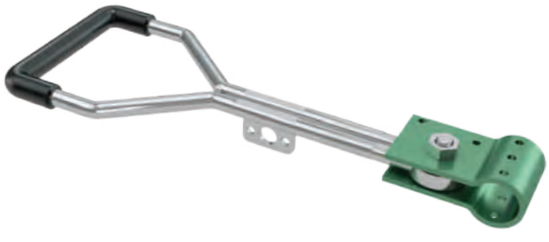

236200

Kapı Kolu Yuvarlak - Set

Round Trailer Lock - - Set

Order Number **Sipariş No**	Type **Tip**
236210	**Krom** / Chrome
236220	**Galvanizli** / Galvanized

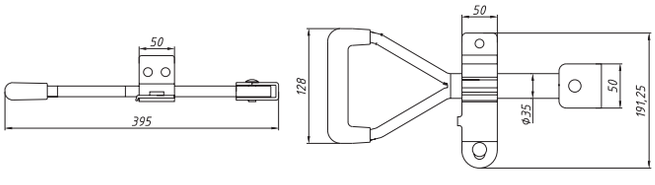

236300

Kapı Kolu Lama Plastik - Set

Trailer Lock - Sheet Plastic - Set

Order Number **Sipariş No**	Type **Tip**
236310	**Krom** / Chrome
236320	**Galvanizli** / Galvanized

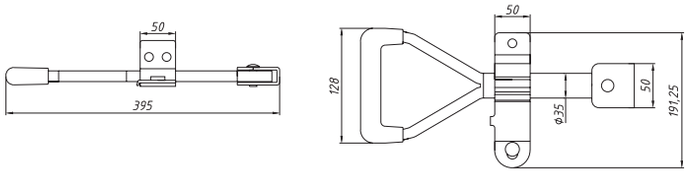

237100

Döküm Kanca Krom - Büyük

Big Cam - Keeper Chrome Casting

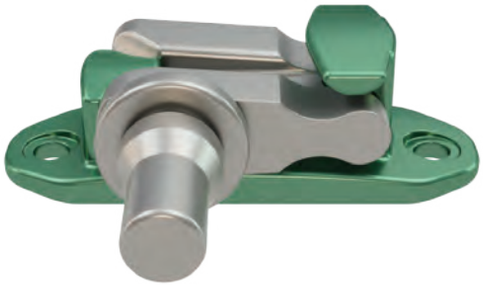

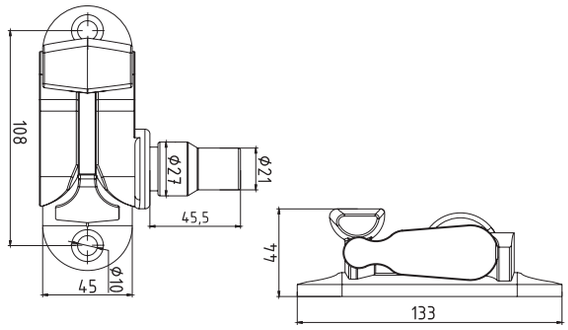

237300

Döküm Kanca

Cam - Keeper

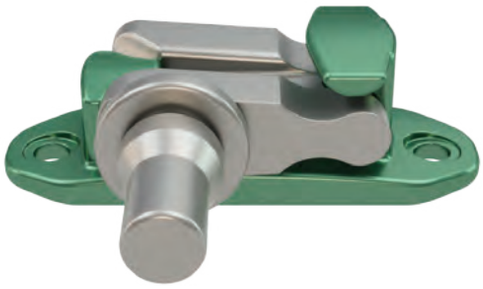

Order Number **Sipariş No**	Type **Tip**
237300	**Normal** / Standard
237310	**Galvanizli** / Galvanized

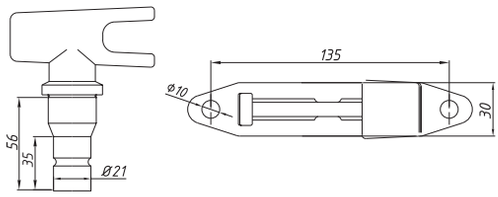

237410

Kapı Altı Kilit

Lower Door Lock

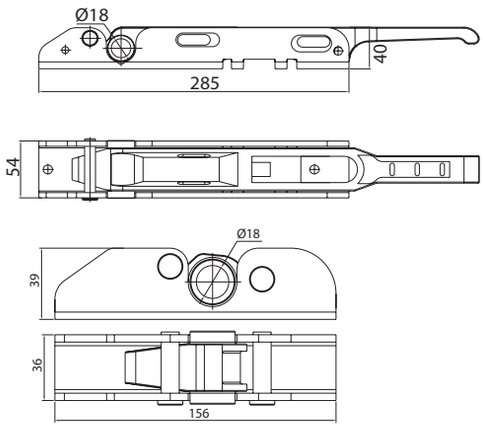

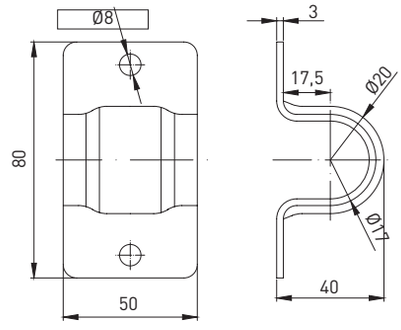

238100

Mil Yuvası Krom Küçük

Tube Socket Chrome - Small

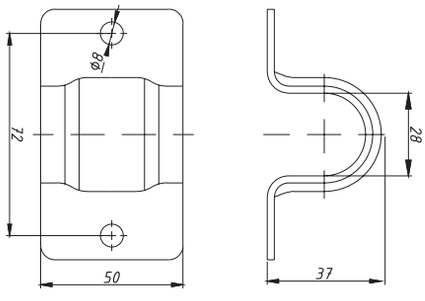

238200

Mil Yuvası Küçük

Tube Socket - Small

Order Number **Sipariş No**	Type **Tip**
238200	**Siyah** / Black
238210	**Galvanizli** / Galvanized

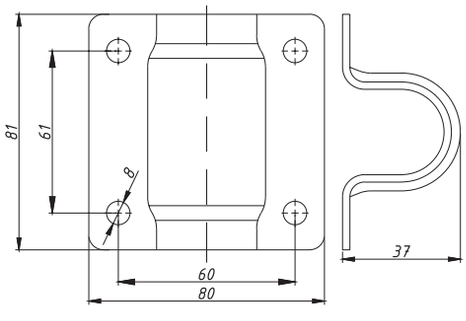

238300

Mil Yuvası Krom Orta

Tube Socket Chrome - Middle

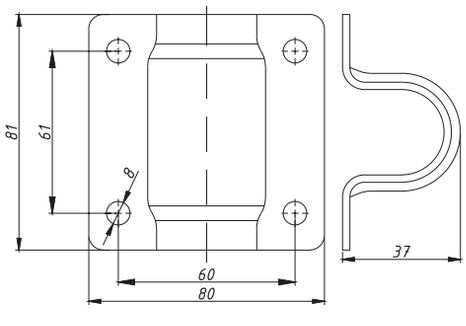

238400

Mil Yuvası Orta

Tube Socket Middle

Order Number **Sipariş No**	Type **Tip**
238400	**Siyah** / Black
238410	**Galvanizli** / Galvanized

238500

Mil Yuvası Krom - Büyük

Tube Socket Chrome - Big

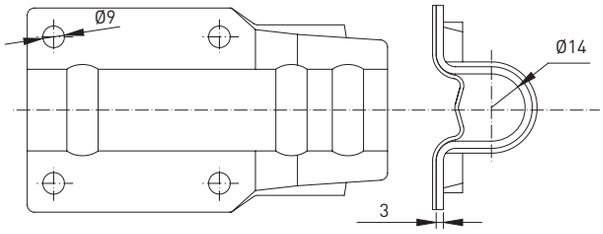

238600

Mil Yuvası - Büyük - Galvanizli

Tube Socket - Big - Galvanized

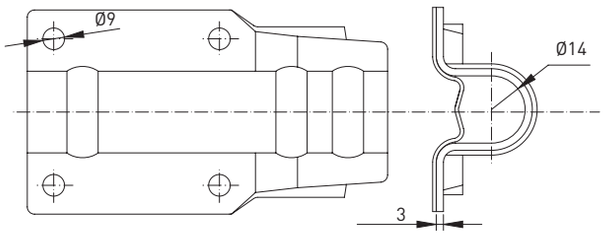

238700

Kapı Kolu Kilit Yeri

Door Handle Lock Spot

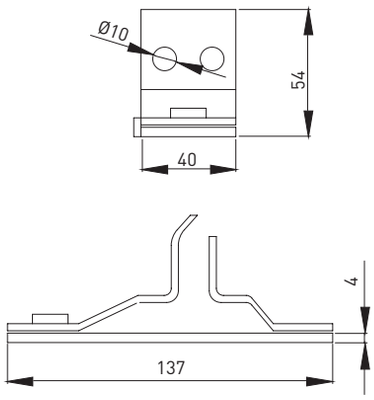

Order Number **Sipariş No**	Type **Tip**
238720	**Galvanizli** / Galvanized

238800

Kapı Kolu Kilit Yeri

Door Handle Lock Spot

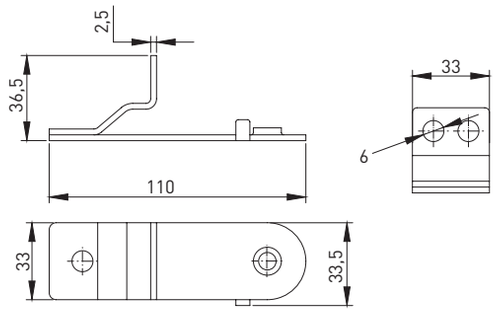

239000

Kilitli Kol
Handle With Lock

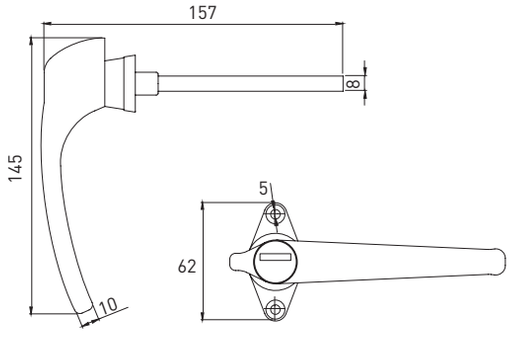

Order Number Sipariş No	Type Tip
239000	**Krom** / Chrome
239005	**Küçük - Siyah** / Small - Black
239010	**Küçük - L** / Small - L

239100

Kapı Kilidi Kollu
Door Lock With Handle

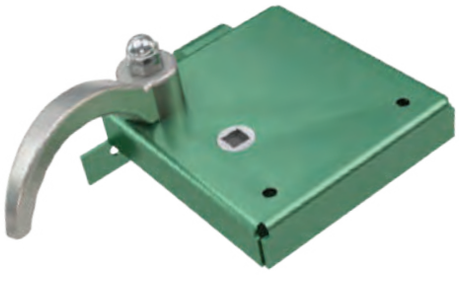

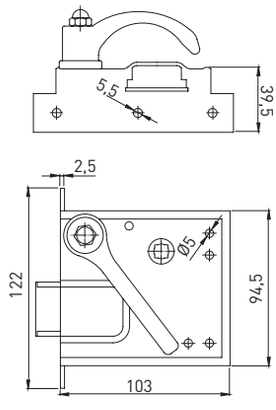

Order Number Sipariş No	Type Tip
239110	**Sağ - Küçük** / Right - Small
239120	**Sol - Küçük** / Left - Small
239210	**Sağ - Büyük** / Right - Big
239220	**Sol - Büyük** / Left - Big

239300

Tekli Bagaj Kilidi
Single Trunk Lock

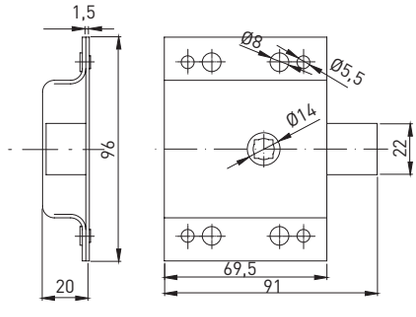

239600

İspanyolet Kilit
Latch

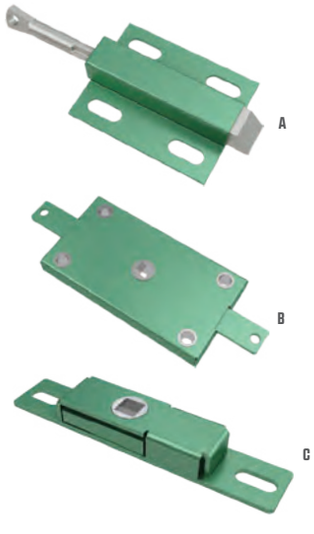

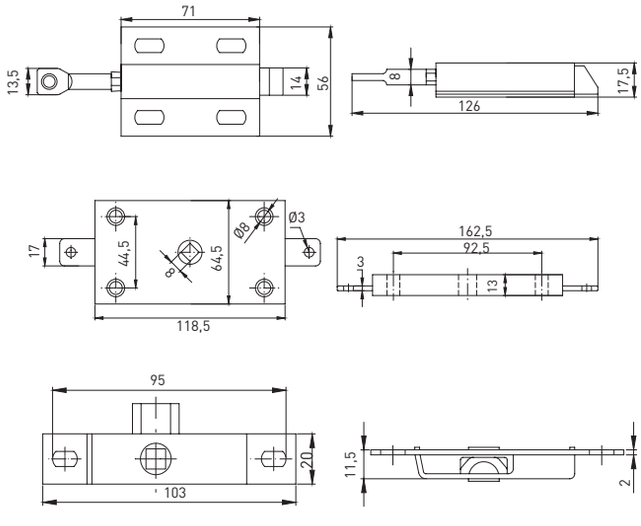

Order Number Sipariş No	Type Tip
239610	**Kilit Ucu (A)** Latch (A)
239620	**Kilit Merkezi (B)** Centre Body (B)
239700	**Panjur Kilidi (C)** Shutter Lock (C)

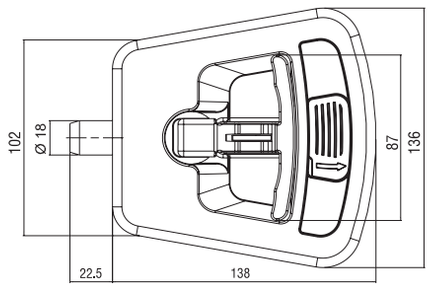

239350

Dolap Kilidi Anahtarlı
Box Lock With Key

Order Number **Sipariş No**	Type **Tip**
239350	Plastik / Plastic

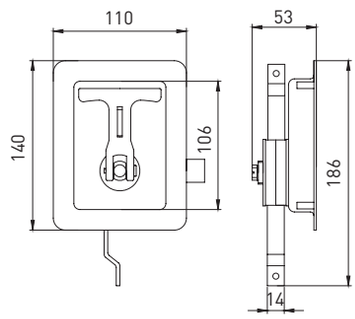

239400

Yeni Dolap Kilidi
Box Lock - New Model

Order Number **Sipariş No**	Type **Tip**
239410	Dikey / Vertical
239420	Yatay / Horizontal

239500

Dolap Kilidi Anahtarlı
Box Lock With Key

Order Number **Sipariş No**	Type **Tip**
239510	**Büyük - Siyah (B)** / Big - Black (B)
239515	**Büyük - Galvanizli (B)** / Big - Galvanized (B)
239520	**Küçük - Anahtarlı (B)** / Small - With Key (B)
239525	**Küçük - Anahtarsız (B)** / Small -Without Key (B)
239530	**Krom (A)** / Chrome (A)
239540	**Plastik - Anahtarsız (C)** / Plastic - Without Key (C)
239545	**Plastik - Anahtarlı (C)** / Plastic - With Key (C)

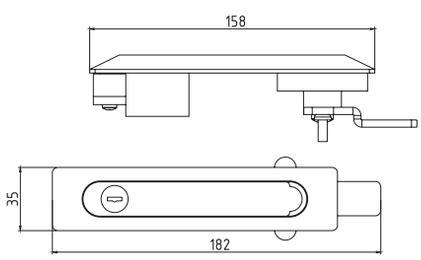

239550

Yeni Kilitli Kol
Lock With Key - New Model

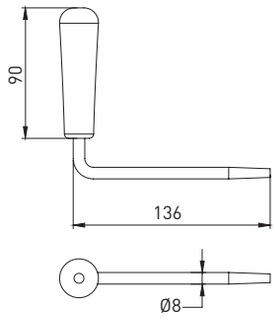

240000

L Bagaj Kolu
L Trunk Key

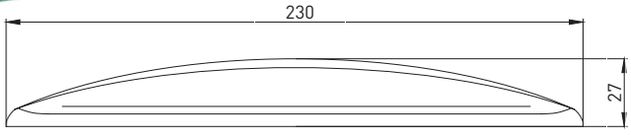

240100

Kaput Çekme
Hood Handle

240150

Kulp / *Handle*

Elcek 302 / *302 Model*

Çekme Kol Metal / *Steel*

Alüminyum / *Aluminum*

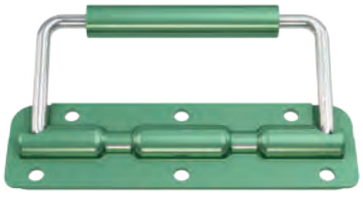

Metal - Yaylı / *Metal With Spring*

Plastik Küçük / *Plastic Small*

Order Number **Sipariş No**	Type **Tip**
240160	**Alüminyum - 200 mm** / Aluminum
240161	**Alüminyum - 300 mm** / Aluminum
240162	**Alüminyum - 350 mm** / Aluminum
240163	**Alüminyum - 400 mm** / Aluminum
240164	**Alüminyum - 500 mm** / Aluminum
240165	**Plastik Küçük** / Plastic Small
240170	**Elcek 302 Model Kapı** / Door 302 Model
240180	**Metal - Yaylı** / Metal With Spring
240185	**Elcek Küçük Plastik** / Plastic Small
249150	**Çekme Kol Metal Siyah 155 mm** Steel Black 155 mm
249160	**Çekme Kol Metal Beyaz 155 mm** Steel White 155 mm

Elcek Küçük Plastik / *Plastic Small*

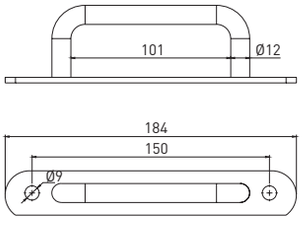

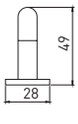

249200

El Tutamağı
Handle

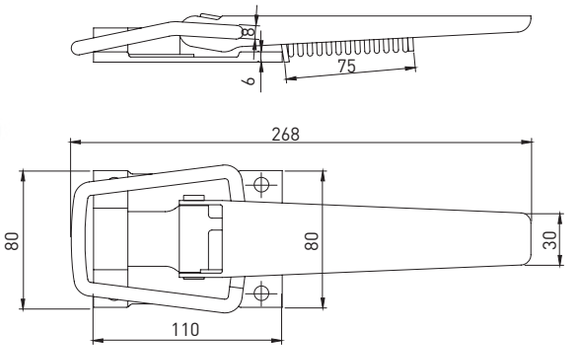

242100

Döküm Dorse Kilidi

Trailer Lock / Casting

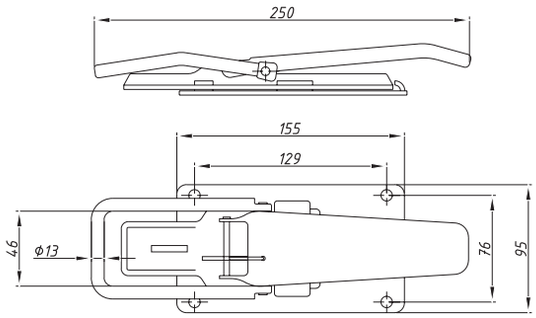

242200

Dorse Kilidi Düz

Trailer Lock / Standard

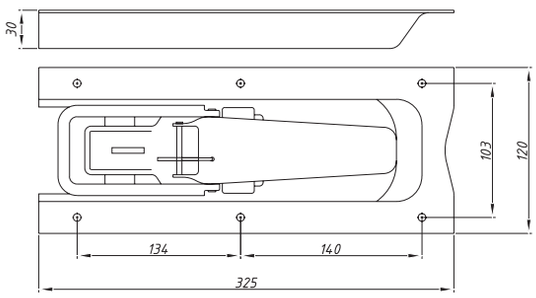

242300

Dorse Kilidi Gömme

Trailer Mortise Lock

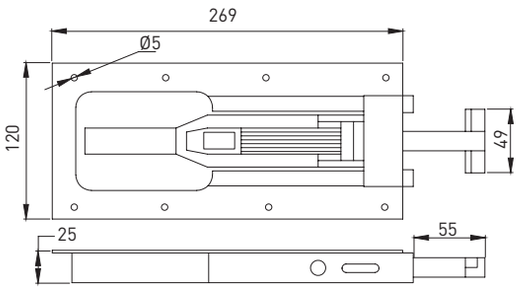

242400

Yeni Dorse Kilidi Gömme

Trailer Mortise Lock / New

Order Number **Sipariş No**	Type **Tip**
242410	**Kilit** Lock
242420	**Karşılık** Lock Striker

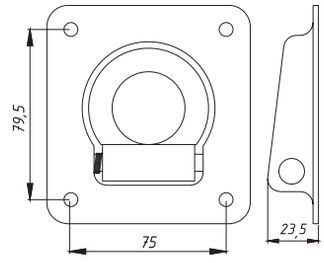

243000

Gömme Sallama Halka

Ring

Order Number **Sipariş No**	Type **Tip**
243010	Küçük / Small

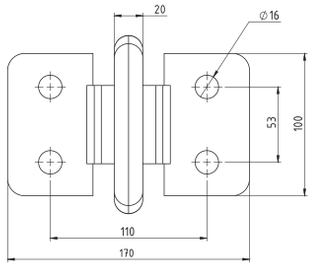

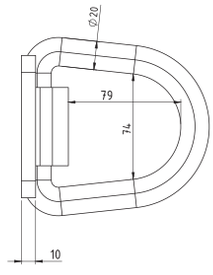

244000

Gemi Tokası

Ring

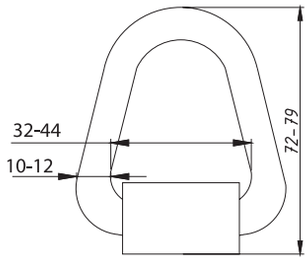

245000

Sallama Halka

Ring

Order Number **Sipariş No**	Type **Tip**
245010	10 mm
245020	10 mm **Galvanizli** / Galvanized
245030	12 mm
245040	12 mm **Galvanizli** / Galvanized
245050	20 mm
245065	27 mm **Dövme** / Forged

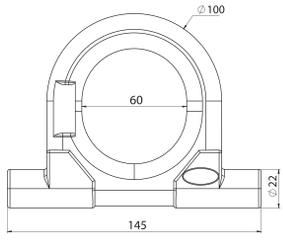

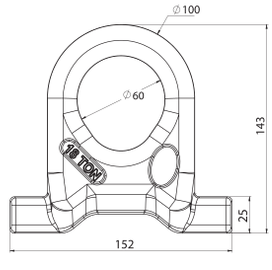

245000

Sallama Halka

Ring

Order Number **Sipariş No**	Type **Tip**
245055	**20 mm Dövme** / Forged
245060	**22 mm Dövme 10 Ton** / Forged

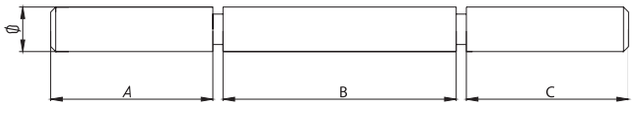

246000

İlave Menteşe

Shaft Hinge

Order Number **Sipariş No**	Lenght (cm) **Boy (cm)**	**B - mm**	**A - mm**
246010	24	123	80
246020	29	185	54
246030	33	167	80
246050	38	217	80
246060	40	237	80

249320

Ayak Basamağı
Step Ladder

Order Number **Sipariş No**	Type **Tip**
249320-1	**Sağ** / Right
249320-2	**Sol** / Left
249330	**Açılır - Kapanır** / Folding Type

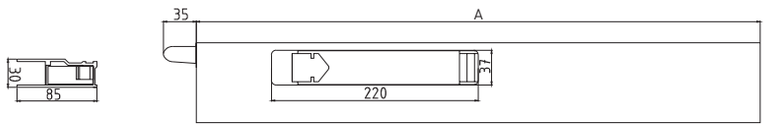

249340

Kilitleme Profili - Aluminyum
Locking Profile - Aluminum

Order Number **Sipariş No**	Type **Tip**
249340	60
249350	75

151000

Tanker Kapağı
Tanker Cover

Order Number **Sipariş No**	Diameter Ø **Cap Q**	Type **Tip**
151010	400	**Standart** / Standard
151015	450	**Özel** / Special
151020	400	**Galvanizli** / Galvanized
151025	360	**Galvanizli - Küçük** Galvanized - Small
151030	400	**Siboplu** / With Valve
151035	400	**Galvanizli - Alüminyum** Galvanized - Aluminum
151040	360	**Krom** / Chrome

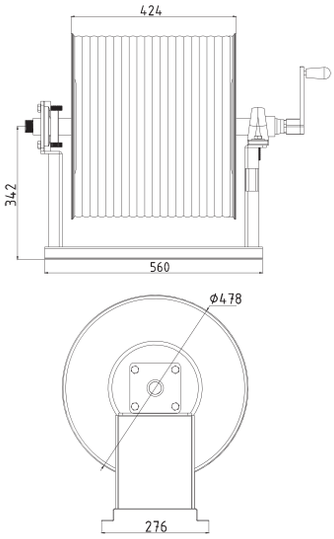

152000

Çıkrık
Pulley

Order Number **Sipariş No**	Type **Tip**
152010	**Büyük** / Big (A)
152020	**Küçük** / Small (A)
152030	**Yeni** / New (B)
152048	**Çıkrık Hortumu** Pulley Hose

ÇAYIROVA

Römork ve Treyler Ekipmanları

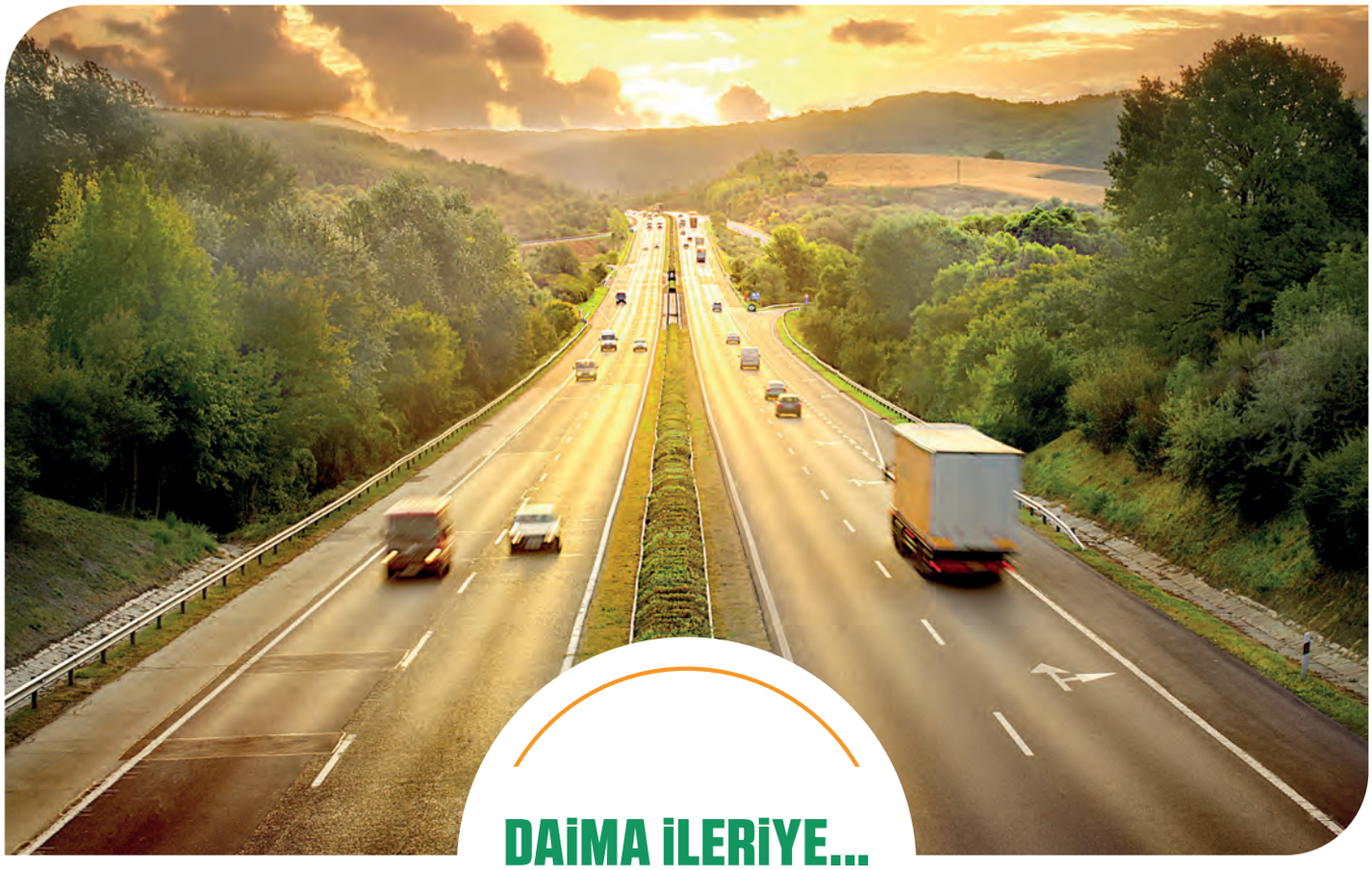

DAİMA İLERİYE...

Always Forward...

ÇAYIROVA

Römork ve Treyler Ekipmanları
Trailer Components

ÇAYIROVA OTOMOTİV SAN. ve TİC. A.Ş

KOSB. 3. Sk. No: 3 42250
Selçuklu/KONYA/TÜRKİYE

+90 332 **345 33 00**
+90 332 **345 31 21**

Export/Import:
bilgi@cayirova.com.tr
Satış:
pazarlama@cayirova.com.tr

adilkarinca.net

cayirova.com.tr